940 Professional IC Vario

940 Professional IC Vario ONE/Prep 1

Manual – Short Instructions

8.940.8102EN / v3 / 2017-12-31

Metrohm

Metrohm AG
CH-9100 Herisau
Switzerland
Phone +41 71 353 85 85
Fax +41 71 353 89 01
info@metrohm.com
www.metrohm.com

940 Professional IC Vario

940 Professional IC Vario ONE/Prep 1

2.940.1110

Manual – Short Instructions

8.940.8102EN / v3 / 2017-12-31

Technical Communication
Metrohm AG
CH-9100 Herisau
techcom@metrohm.com

This documentation is protected by copyright. All rights reserved.

This documentation has been prepared with great care. However, errors can never be entirely ruled out. Please send comments regarding possible errors to the address above.

Table of contents

1 About these short instructions 1

2 Introduction 2

2.1 Instrument description 2

2.2 Intended use 4

2.3 Safety instructions 4

2.3.1 General notes on safety 4

2.3.2 Electrical safety 4

2.3.3 Tubing and capillary connections 5

2.3.4 Flammable solvents and chemicals 6

2.3.5 Recycling and disposal 6

2.4 Symbols and conventions 6

3 Overview of the instrument 8

3.1 Front 8

3.2 Rear 10

4 Installation 12

4.1 Setting up the instrument 12

4.1.1 Packaging 12

4.1.2 Checks 12

4.1.3 Location 12

4.2 Removing the handle 12

4.3 Removing transport locking screws 13

4.4 Connecting the drainage tubing and leak sensor 15

4.4.1 Installing the drainage tubing 15

4.4.2 Connecting the leak sensor 16

4.5 Column thermostat 17

4.6 Connecting the eluent bottle 17

4.7 Connecting the eluent degasser 20

4.8 Installing the high-pressure pump 20

4.9 Installing an inline filter 20

4.10 Installing the pulsation absorber 20

4.11 Injection valve 20

4.12 Installing the conductivity detector 20

4.13 Installing the amperometric detector 21

4.14 Connecting the sample degasser (optional) 21

4.15 Peristaltic pump 22

4.15.1 Installing the peristaltic pump 22

4.16 Connecting the instrument to a computer 24

4.17 Connecting the instrument to the power grid 25

4.18 Initial start-up 26

4.19 Connecting and rinsing the guard column 28

4.20 Connecting the separation column 29

4.21 Conditioning 31

5 Operation 33

6 Accessories 34

Index 35

Table of figures

Figure 1 Front 8
Figure 2 Rear 10
Figure 3 Removing the transport locking screws 14
Figure 4 Installing the tubing weighting and aspiration filter 19

1 About these short instructions

This short instruction manual contains important chapters from the comprehensive manual. In addition to an introduction, safety instructions and an overview of the instrument, you will also find information about installing and operating the 940 Professional IC Vario ONE/Prep 1 as well as information regarding the warranty. You can download the comprehensive manual as a PDF file from the Internet.

Downloading the manual

You can find the detailed manual on the Internet under *http://www.metrohm.com/*:

1. Enter the order number for your instrument as the search term (e.g. **2.940.1110**).
2. Click on **>More information**.
3. Click on **Documents**.
   All available documents for the instrument will be displayed.
4. Click on the PDF link to download the desired manual.

2 Introduction

2.1 Instrument description

The 940 Professional IC Vario is a professional ion chromatograph. It is distinguished by:

- Its intelligence: All of the functions are monitored, optimized and documented in an FDA-compatible manner. Intelligent components, such as iColumns, save important data onto a chip.
- Its compact design: It has a small footprint.
- Its modularity: It provides flexibility for use in various applications. It can hold up to three modules for different functions in its three drawers. Individual modules can be swapped or added as needed.
- Its transparency: All components are easily accessible and located for simple visibility and can be monitored during operation through a large window.
- Its safety: The design separates the wet end and the electronics, thereby preventing liquids from coming into contact with the electronics to a large extent. A leak sensor is integrated into the wet end.
- Its environmental compatibility.
- Its low noise emissions.
- The intelligent MagIC Net software

The 940 Professional IC Vario is operated solely using the MagIC Net software. A USB cable is used to connect the instrument to a computer with MagIC Net installed. The intelligent software detects the instrument automatically and checks its functionality. The software controls and monitors the instrument, evaluates the measured data and manages it in a database.

The 940 Professional IC Vario ONE/Prep 1 consists of the following modules:

Housing

The sturdy housing contains the instrument's electronic components, including their interfaces and three connections for separation columns (two of which are built into the installed column thermostat). In addition, the housing provides space for two detectors (conductivity detectors or amperometric detectors) and up to three plug-ins with different functions. Capillaries and cables can be fed into and out of the instrument through several openings.

Leak sensor

The leak sensor detects leaking liquid that collects in the instrument's base tray. Liquid that leaks in the instrument is routed to the base tray using drainage tubing and detected there.

Column thermostat

The column thermostat regulates the temperature for the separation columns and the eluent, thereby providing stable measuring conditions. The interior of the column thermostat can be heated and cooled. There are two column holders with chip readers in the column thermostat.

Eluent degasser

The eluent degasser removes gas bubbles and dissolved gases from the eluent.

High-pressure pump

The intelligent and low-pulsation high-pressure pump pumps the eluent through the IC system. It is equipped with a chip where its technical specifications and "life history" (operating hours, service data, etc.) are stored.

Inline filter

Inline filters protect the separation column reliably from potential contamination from the eluent. The filter pads with 2 µm pore size can be replaced quickly and easily. They remove particles from the solutions, such as bacteria and algae.

Pulsation absorber

The pulsation absorber protects the separation column from damage caused by pressure fluctuations, e.g. when the injection valve is switched, and reduces interfering pulsations during highly sensitive measurements.

Injection valve

The injection valve connects the eluent path to the sample path. By a quick and precise switching of the valve, a quantity of sample solution defined by the size of the sample loop is injected and flushed to the separation column with the eluent.

Detector

Metrohm offers a series of different detectors for various analysis tasks. A suitable detector type must be ordered as a separate device.

Sample degasser

The sample degasser removes gas bubbles and dissolved gases from the sample.

Peristaltic pump

The peristaltic pump is used for pumping sample and auxiliary solutions. It can rotate in both directions.

Separation column

The intelligent separation column separates different components according to their interactions with the column. Metrohm separation columns are equipped with a chip where their technical specifications and history (start-up, operating hours, injections etc) are stored.

2.2 Intended use

The 940 Professional IC Vario ONE/Prep 1 is used for the determination of cations and anions without suppression using ion chromatography.

This instrument is suitable for processing chemicals and flammable samples. Usage of the 940 Professional IC Vario therefore requires the user to have basic knowledge and experience in handling toxic and caustic substances. Knowledge regarding the application of fire prevention measures prescribed for laboratories is also mandatory.

2.3 Safety instructions

2.3.1 General notes on safety

WARNING

Operate this instrument only according to the information contained in this documentation.

This instrument left the factory in a flawless state in terms of technical safety. To maintain this state and ensure non-hazardous operation of the instrument, the following instructions must be observed carefully.

2.3.2 Electrical safety

The electrical safety when working with the instrument is ensured as part of the international standard IEC 61010.

WARNING

Only personnel qualified by Metrohm are authorized to carry out service work on electronic components.

WARNING

Never open the housing of the instrument. The instrument could be damaged by this. There is also a risk of serious injury if live components are touched.

There are no parts inside the housing which can be serviced or replaced by the user.

Supply voltage

WARNING

An incorrect supply voltage can damage the instrument.

Only operate this instrument with a supply voltage specified for it (see rear panel of the instrument).

Protection against electrostatic charges

WARNING

Electronic components are sensitive to electrostatic charges and can be destroyed by discharges.

Do not fail to pull the power cord out of the power socket before you set up or disconnect electrical plug connections at the rear of the instrument.

The device is to be operated only with the door closed.

2.3.3 Tubing and capillary connections

CAUTION

Leaks in tubing and capillary connections are a safety risk. Tighten all connections well by hand. Avoid applying excessive force to tubing connections. Damaged tubing ends lead to leakage. Appropriate tools can be used to loosen connections.

Check the connections regularly for leakage. If the instrument is used mainly in unattended operation, then weekly inspections are mandatory.

2.3.4 Flammable solvents and chemicals

WARNING

All relevant safety measures are to be observed when working with flammable solvents and chemicals.

- Set up the instrument in a well-ventilated location (e.g. fume cupboard).
- Keep all sources of flame far from the workplace.
- Clean up spilled liquids and solids immediately.
- Follow the safety instructions of the chemical manufacturer.

2.3.5 Recycling and disposal

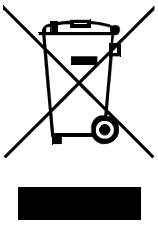

Properly dispose of chemicals and of the product to reduce negative effects on the environment and public health. Local authorities, waste disposal companies or dealers provide more detailed information on disposal. Observe the WEEE EU directive (WEEE = Waste Electrical and Electronic Equipment) for the proper disposal of waste electronic equipment within the European Union.

2.4 Symbols and conventions

The following symbols and formatting may appear in this documentation:

*(5-**12**)*	**Cross-reference to figure legend** The first number refers to the figure number, the second to the instrument part in the figure.
1	**Instruction step** Carry out these steps in the sequence shown.
Method	**Dialog text**, **parameter** in the software
File ► New	Menu or menu item
[Next]	**Button** or **key**
	WARNING This symbol draws attention to a possible life-threatening hazard or risk of injury.
	WARNING This symbol draws attention to a possible hazard due to electrical current.

	WARNING This symbol draws attention to a possible hazard due to heat or hot instrument parts.
	WARNING This symbol draws attention to a possible biological hazard.
	CAUTION This symbol draws attention to possible damage to instruments or instrument parts.
	NOTE This symbol highlights additional information and tips.

3 Overview of the instrument

3.1 Front

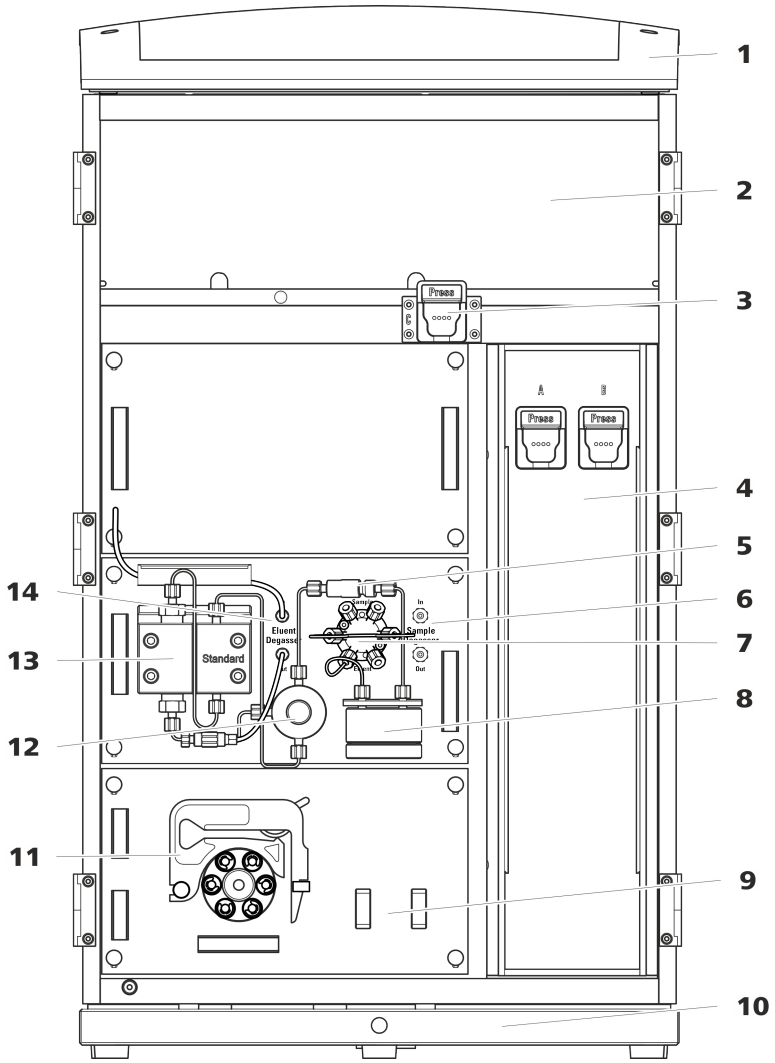

Figure 1 Front

1	**Bottle holder** Offers space for the eluent bottle(s) and additional accessories.	**2**	**Detector chamber** Offers space for two embedded detectors and additional accessories.
3	**Column holder** For a third separation column outside the column thermostat.	**4**	**Column thermostat** With two column holders for two separation columns.
5	**Inline filter**	**6**	**Sample degasser**

7	**Injection valve**	**8**	**Pulsation absorber**
9	**Holder** For a dialysis cell or ultrafiltration cell.	**10**	**Base tray** With leak sensor.
11	**Peristaltic pump** For transporting solutions for sample preparation.	**12**	**Purge valve** For deaerating the high-pressure pump.
13	**High-pressure pump**	**14**	**Eluent degasser**

3.2 Rear

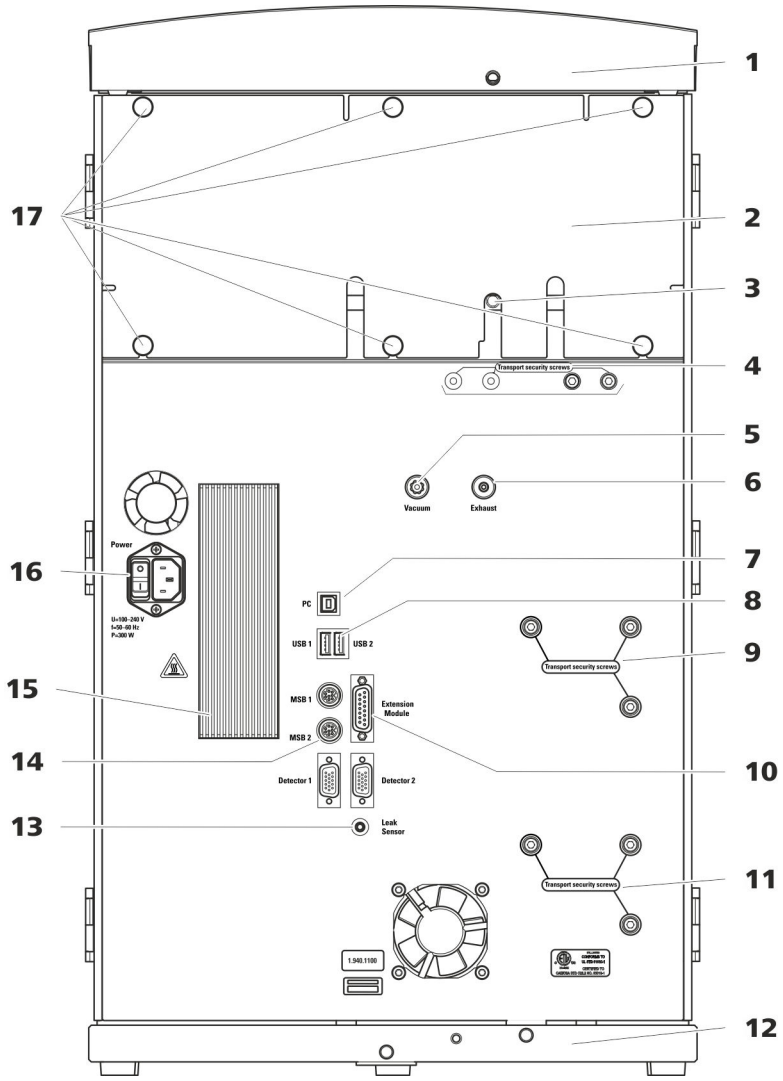

Figure 2 Rear

1	**Bottle holder** Offers space for the eluent bottle(s) and additional accessories.	**2**	**Back panel** Removable. Enables access to the detector chamber.
3	**Drainage tubing connection** For connecting the drainage tubing, which guides escaped liquids away from the detector chamber.	**4**	**Transport locking screws** For securing the vacuum pump(s) when transporting the instrument. Up to two vacuum pumps can be installed in an instrument. Only two transport locking screws are used if just one vacuum pump is installed.

5	**Vacuum connection** For connecting an Extension Module that has a degasser but not its own vacuum pump. This connection has to be firmly sealed with a stopper when not in use.
6	**Exhaust opening** Labeled *Exhaust*. For extracting the air from the vacuum chamber.
7	**PC connection socket** For connecting the instrument to the computer with the USB cable (6.2151.020).
8	**USB connection sockets** Labeled *USB 1* and *USB 2*. For connecting USB devices.
9	**Transport locking screws** For securing the high-pressure pump (in the middle plug-in) when transporting the instrument.
10	**Extension Module connection socket** Labeled *Extension Module*. For connecting the cable (6.2156.060) used for connecting the instrument to the Extension Module.
11	**Transport locking screws** For securing the high-pressure pump (in the bottom plug-in) when transporting the instrument. These screws are only installed if a plug-in with a high-pressure pump is used in the bottom slot.
12	**Base tray** With leak sensor and leak sensor cable.
13	**Leak sensor connection socket** Labeled *Leak Sensor*. For connecting the leak sensor connection cable coiled up in the base tray.
14	**MSB connection sockets** Labeled *MSB 1* and *MSB 2*. For connecting MSB devices.
15	**Cooler** For cooling the power supply unit. May become hot!
16	**Power socket** Power socket for connecting the power cable and power switch for switching the instrument on and off.
17	**Knurled screws** For fastening the removable back panel.

4 Installation

4.1 Setting up the instrument

4.1.1 Packaging

The instrument is supplied in protective packaging together with the separately packed accessories. Keep this packaging, as only this ensures safe transportation of the instrument.

4.1.2 Checks

Immediately after receipt, check whether the shipment has arrived complete and without damage by comparing it with the delivery note.

4.1.3 Location

The instrument has been developed for operation indoors and may not be used in explosive environments.

Place the instrument in a location of the laboratory which is suitable for operation, free of vibrations, protected from corrosive atmosphere, and contamination by chemicals.

The instrument should be protected against excessive temperature fluctuations and direct sunlight.

4.2 Removing the handle

The instrument is equipped with a handle in order to make it easier to transport. The handle can be removed once the instrument is in place in the lab.

Accessories

You do not need any accessories for the following work steps.

Removing the handle

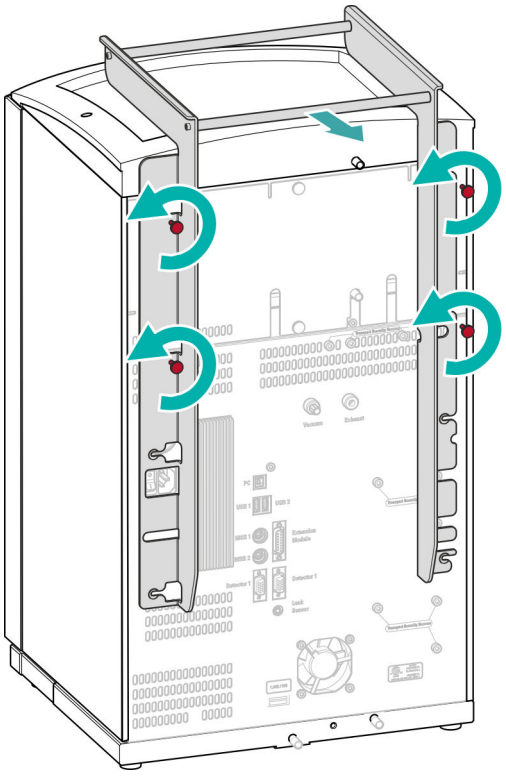

4.3 Removing transport locking screws

To avoid damage to the drives for the high-pressure pump and the vacuum pump during transport, the pumps are secured with transport locking screws. These are located at the rear of the instrument and labeled with **Transport security screws**.

Remove these transport locking screws before the initial start-up.

Accessories

For this step you need:

- 4 mm hex key (6.2621.030)

Removing the transport locking screws

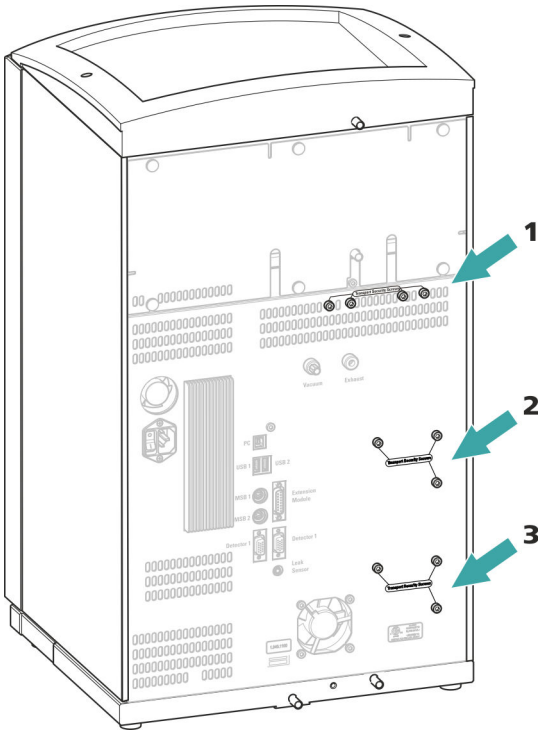

Figure 3 Removing the transport locking screws

1	**Transport locking screws** For the vacuum pump.
2	**Transport locking screws** For the high-pressure pump.
3	**Transport locking screws** For an additional high-pressure pump in the bottom drawer.

Store the transport locking screws in a safe place. Reinsert the transport locking screws each time you transport the instrument a significant distance.

CAUTION

The pumps may be damaged if you transport the instrument without inserting the transport locking screws.

4.4 Connecting the drainage tubing and leak sensor

The leak sensor detects leaking liquid that collects in the instrument's base tray. Liquid that leaks in the bottle holder or in the detector chamber is conveyed to the base tray using drainage tubing and is detected there.

If the leak sensor detects a leak in the IC system, the IC instrument is switched off. The software displays a warning.

The leak sensor functions properly only if the following preconditions are met:

- The drainage tubing is connected.
- The leak sensor connection cable is inserted into the leak sensor connection socket.
- The 940 Professional IC Vario is switched on.
- The leak sensor is switched to **active** in the software.

4.4.1 Installing the drainage tubing

Liquid that leaks in the bottle holder or detector chamber flows to the rear of the instrument. Openings on the bottle holder and in the detector chamber allow the liquid to drain. The drainage tubing has to be mounted at these openings. This drainage tubing guides the leaking liquid to the base tray where the leak sensor is located.

Accessories

For this step you need the following parts from the accessory kit: Vario/Flex Basic (6.5000.000):

- 2 × silicone tubing (6.1816.020)
- Y connector (6.1807.010)

You also need scissors.

Connecting the drainage tubing

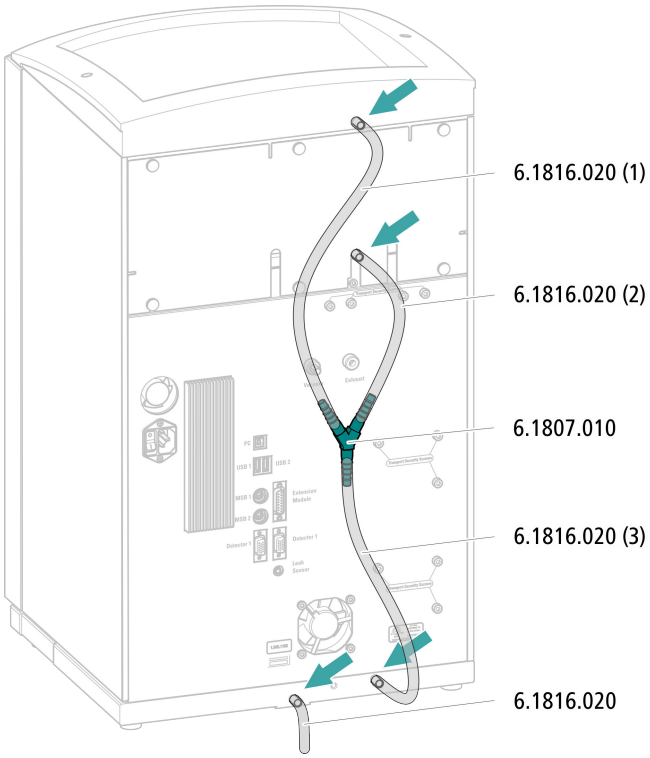

4.4.2 Connecting the leak sensor

Plugging in the leak sensor connection cable

The leak sensor connection cable is coiled up in the base tray.

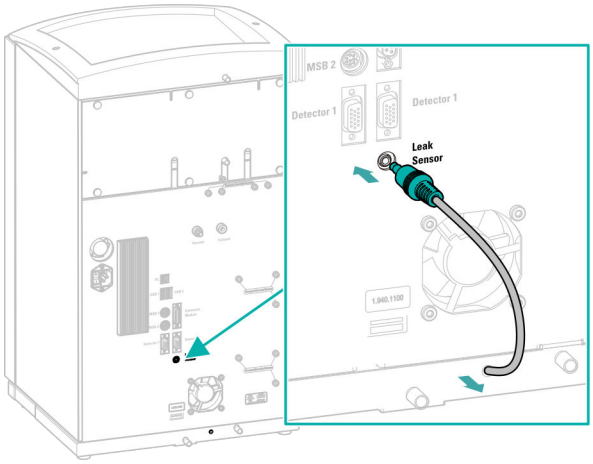

4.5 Column thermostat

The column thermostat is completely connected. No installation work is required.

4.6 Connecting the eluent bottle

The eluent is aspirated out of the eluent bottle via the eluent aspiration tubing . The eluent aspiration tubing is installed on the entry to the eluent degasser.

Accessories

For this step, you need the following accessories:

These parts are part of the *Vario/Flex ONE* accessory kit (6.5000.010).

- Eluent bottle (6.1608.070)
- The *eluent bottle cap GL 45* accessory set (6.1602.160)
  This accessory set contains the bottle cap, an M6 tubing nipple, an M8 tubing nipple, two O-rings and an M6 and M8 threaded stopper.
- The *tubing adapter for aspiration filter* accessory set (6.2744.210)
  This accessory set contains a filter holder, a clamping screw and tubing weighting.
- An aspiration filter (6.2821.090)
- The adsorber tube (6.1609.000)
- The SGJ clip (6.2023.020)

Connecting the eluent aspiration tubing

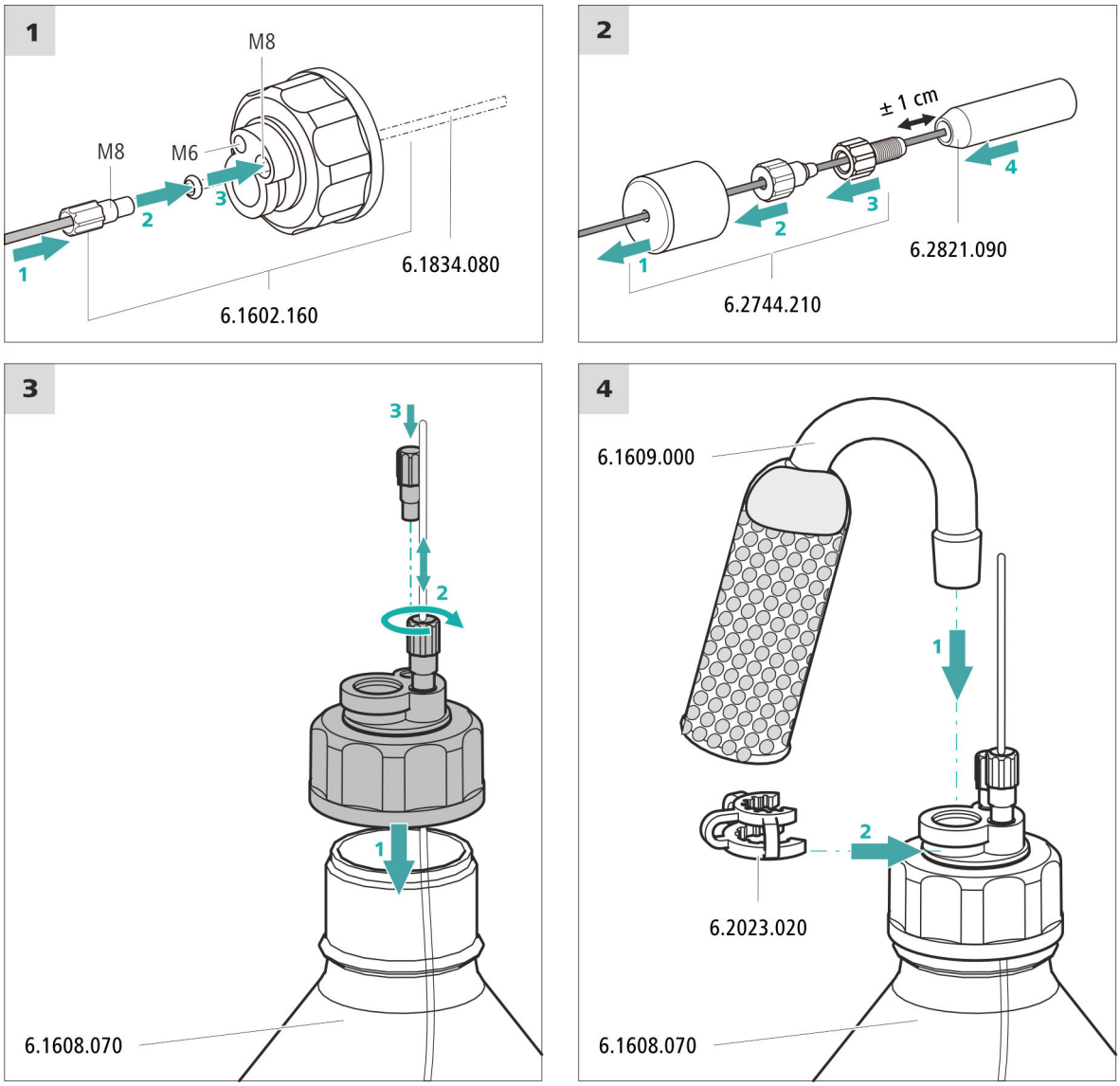

1 Pre-rinsing the aspiration filter

NOTE

Always wear gloves when handling the aspiration filter.

In order to avoid air bubbles after the installation of the aspiration filter, we recommend pre-rinsing the aspiration filter with ultrapure water or eluent.

For pre-rinsing, you will need the adapter Luer inner, M6 outer (6.02744.050), a syringe and a vessel with ultrapure water or eluent.

- Screw the adapter to the aspiration filter.
- Insert the syringe into the adapter.

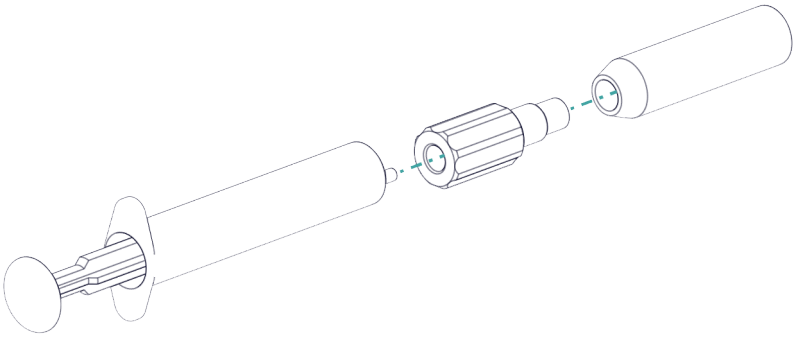

- Immerse the aspiration filter tin a vessel with ultrapure water or eluent.
- Fill the syringe completely with ultrapure water or eluent 3 times and then empty it again each time.

2 Mounting the aspiration filter

NOTE

Always wear gloves when handling the aspiration filter.

- Place the loose end of the eluent aspiration tubing into the aspiration filter.
  The end of the tubing should reach approximately to the center of the aspiration filter.
- Tighten the aspiration filter to the filter holder.

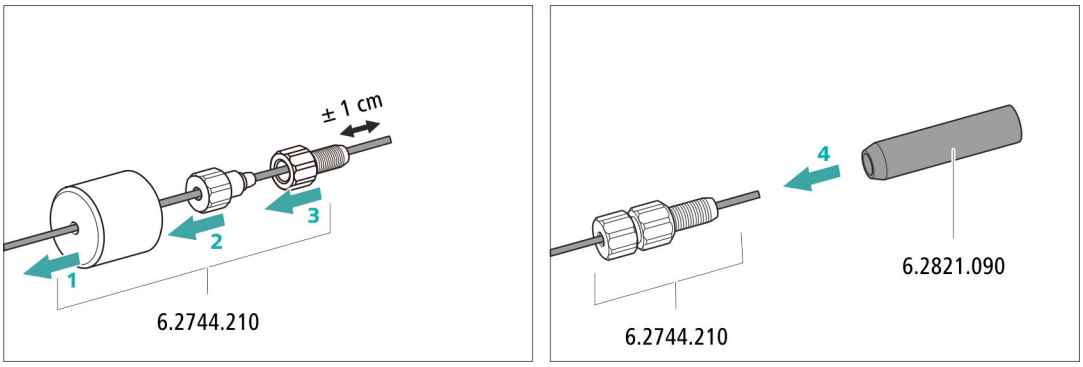

Figure 4 Installing the tubing weighting and aspiration filter

4.7 Connecting the eluent degasser

The eluent degasser is completely connected. No installation work is required.

4.8 Installing the high-pressure pump

The high-pressure pump is completely connected. No installation work is required.

4.9 Installing an inline filter

The inline filter is completely connected. No installation work is required.

4.10 Installing the pulsation absorber

The pulsation absorber is installed between the high-pressure pump and the injection valve. It protects the separation column from damage caused by pressure fluctuations, e.g. when the injection valve is switched, and reduces interfering pulsations during highly sensitive measurements.

The pulsation absorber is completely connected. No installation work is required.

4.11 Injection valve

The injection valve is completely connected. No installation work is required.

4.12 Installing the conductivity detector

The 940 Professional IC Vario provides enough space for two detectors and additional accessories in the detector chamber. The detectors are available as separate devices and are supplied with separate manuals.

Placing the detector in the instrument

Follow the instructions in the chapter *Inserting the detector* in the manual for the detector.

Connecting the detector to the eluent path

NOTE

The separation column is not inserted into the instrument until it is being started up for the first time. Until then, the detector inlet capillary has to be connected directly to the column inlet capillary using a coupling (6.2744.040).

Accessories

For this step, you need the following accessories:

- Coupling (6.2744.040)
- 2 × pressure screw (6.2744.010)

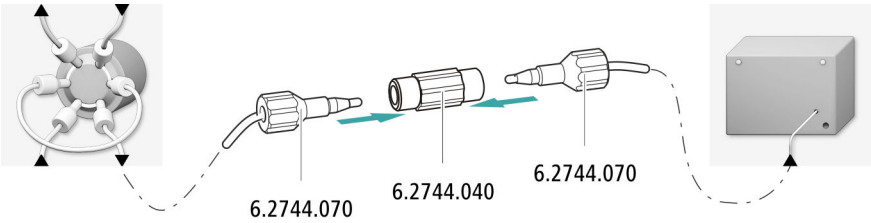

4.13 Installing the amperometric detector

The 940 Professional IC Vario provides enough space for two detectors and additional accessories in the detector chamber. The detectors are available as separate devices and are supplied with separate manuals.

Placing the detector in the instrument

Follow the instructions in the chapter *Inserting the detector* in the manual for the detector.

4.14 Connecting the sample degasser (optional)

Gas bubbles in the sample lead to poor reproducibility, as the amount of sample in the sample loop is not always the same. Therefore, we recommend degassing samples that contain gas before injection.

NOTE

The sample degasser does not have to be connected. We recommend only using the sample degasser if the application requires it.

The rinsing time increases by at least two minutes when the sample degasser is connected.

Accessories

For this step, you need the following accessories:

- 2 × pressure screw, long (6.2744.090)
- PTFE capillary (6.1803.040)

Connecting the sample degasser

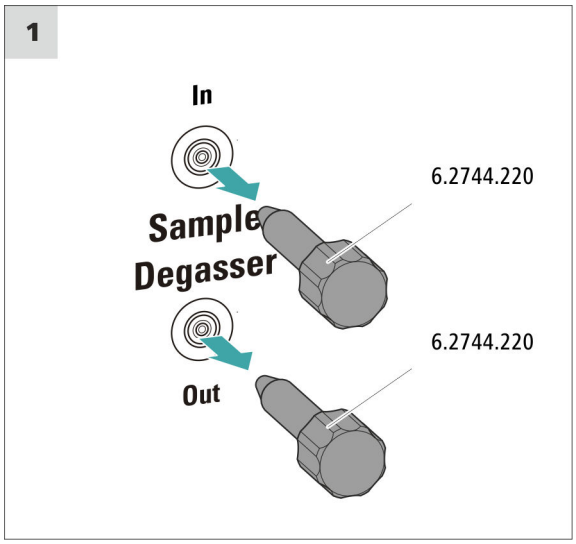

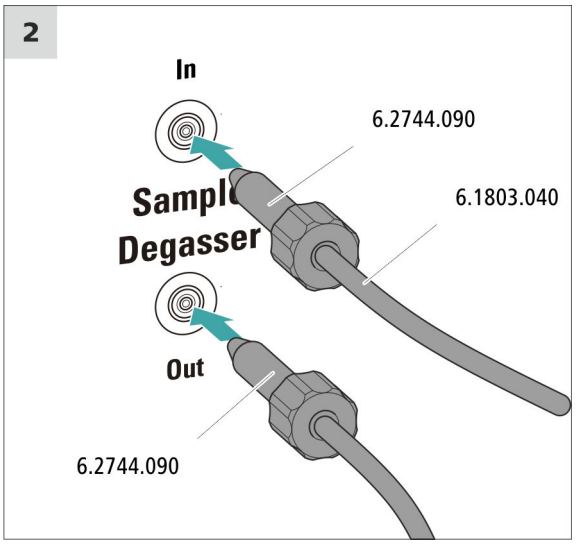

CAUTION

If the sample degasser is not used, the inlet and outlet **must** be sealed with threaded stoppers (6.2744.220).

4.15 Peristaltic pump

4.15.1 Installing the peristaltic pump

Installing the pump tubing

Pump tubing can differ in terms of material, diameter and thus flow rate. Different pump tubing is used depending on the application.

Selecting the pump tubing and adapter

1. Select pump tubing suitable for the application .
2. Select an adapter suitable for the pump tubing. The adapters are included with the pump tubing connection with locking nut and filter (6.2744.180).

Installing the pump tubing

For this step, you need the following accessories:

- Tubing cartridge (6.2755.000)
- Pump tubing (6.1826.XXX)
- Coupling olive/UNF 10/32 (6.2744.034)
- Pump tubing connection with locking nut and filter (6.2744.180): Includes a locknut, 3 adapters and a tubing olive with filter holder.
- 2 × pressure screw, short (6.2744.070)

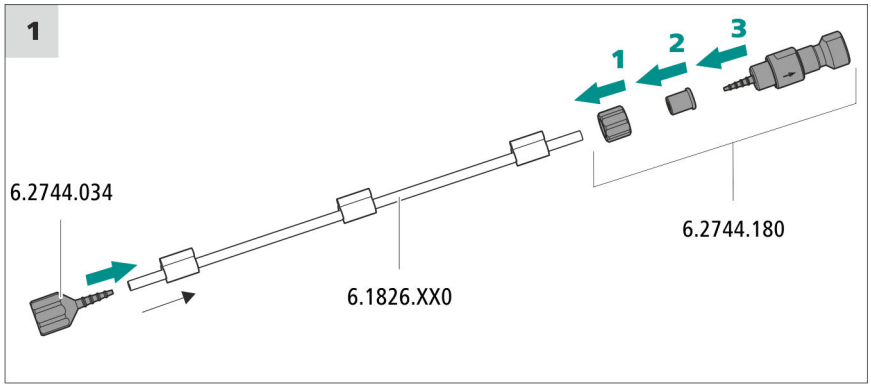

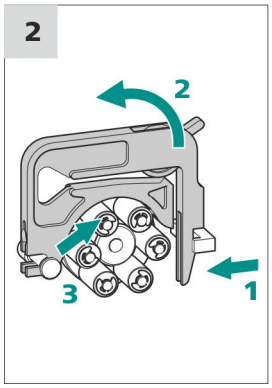

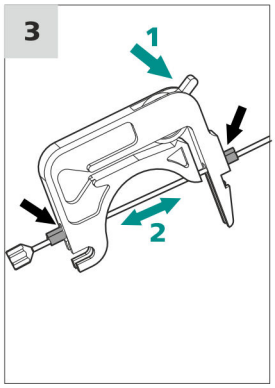

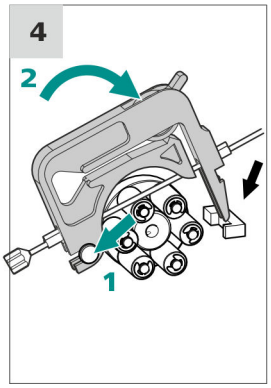

Setting the contact pressure correctly

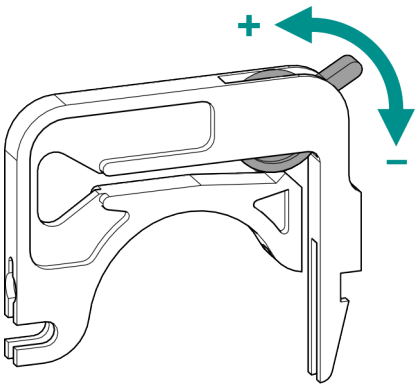

1
- Fully loosen the contact pressure lever , i.e. press it all the way down.
- In the software, activate the drive of the peristaltic pump with the desired speed.
- Raise the contact pressure lever one step at a time until liquid flows.
- When liquid starts flowing, raise the contact pressure lever by an additional two ratchet increments.

The contact pressure is now set optimally.

4.16 Connecting the instrument to a computer

NOTE

If the instrument is connected to the computer, then it must be switched off.

Accessories

For this step, you need the following accessories:

- USB connecting cable (6.2151.020)

Connecting the USB cable

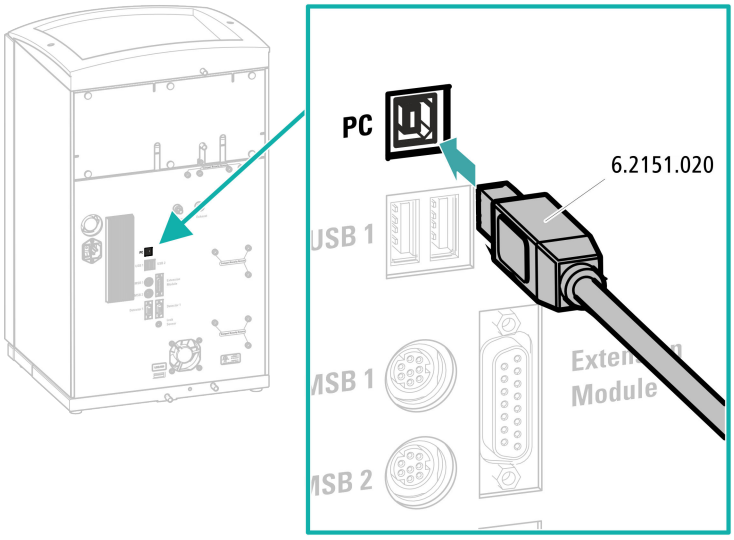

4.17 Connecting the instrument to the power grid

WARNING

Electric shock from electrical potential

Risk of injury by touching live components or through moisture on live parts.

- Never open the housing of the instrument while the power cord is still connected.
- Protect live parts (e.g. power supply unit, power cord, connection sockets) against moisture.
- Unplug the power plug immediately if you suspect that moisture has gotten inside the instrument.
- Only personnel who have been issued Metrohm qualifications may perform service and repair work on electrical and electronic parts.

Connecting the power cord

Accessories

Power cord with the following specifications:

- Length: max. 2 m
- Number of cores: 3, with protective conductor
- Instrument plug: IEC 60320 type C13
- Conductor cross-section 3x min. 1.0 mm^2 / 18 AWG

- Power plug:
  - according to customer requirement (6.2122.XX0)
  - min. 10 A

NOTE

Do not use a not permitted power cord!

1 Plugging in the power cord

- Plug the power cord into the instrument's power socket.
- Connect the power cord to the power grid.

4.18 Initial start-up

Even before the guard column and separation column are installed, the entire system must be completely rinsed with eluent for the first time.

Rinsing the IC system

CAUTION

The separation column and the guard column are not permitted to be installed at the time of the initial start-up.

Make sure that a coupling (6.2744.040) is being used instead of the columns.

1 Preparing the software

- Start the **MagIC Net** computer program.
- Open the **Equilibration** tab in MagIC Net: **Workplace ► Run ► Equilibration**.
- Import (or create) a suitable method.
  Also see: *MagIC Net Tutorial* and online help.

2 Preparing the instrument

- Ensure that the eluent aspiration tubing is immersed in the eluent and that there is enough eluent in the eluent bottle.
- Switch on the instrument.

MagIC Net detects the instrument and all of its modules.

3 Starting equilibration

- Start the equilibration in MagIC Net: **Workplace ▶ Run ▶ Equilibration ▶ Start HW**.

4 Deaerating the high-pressure pump

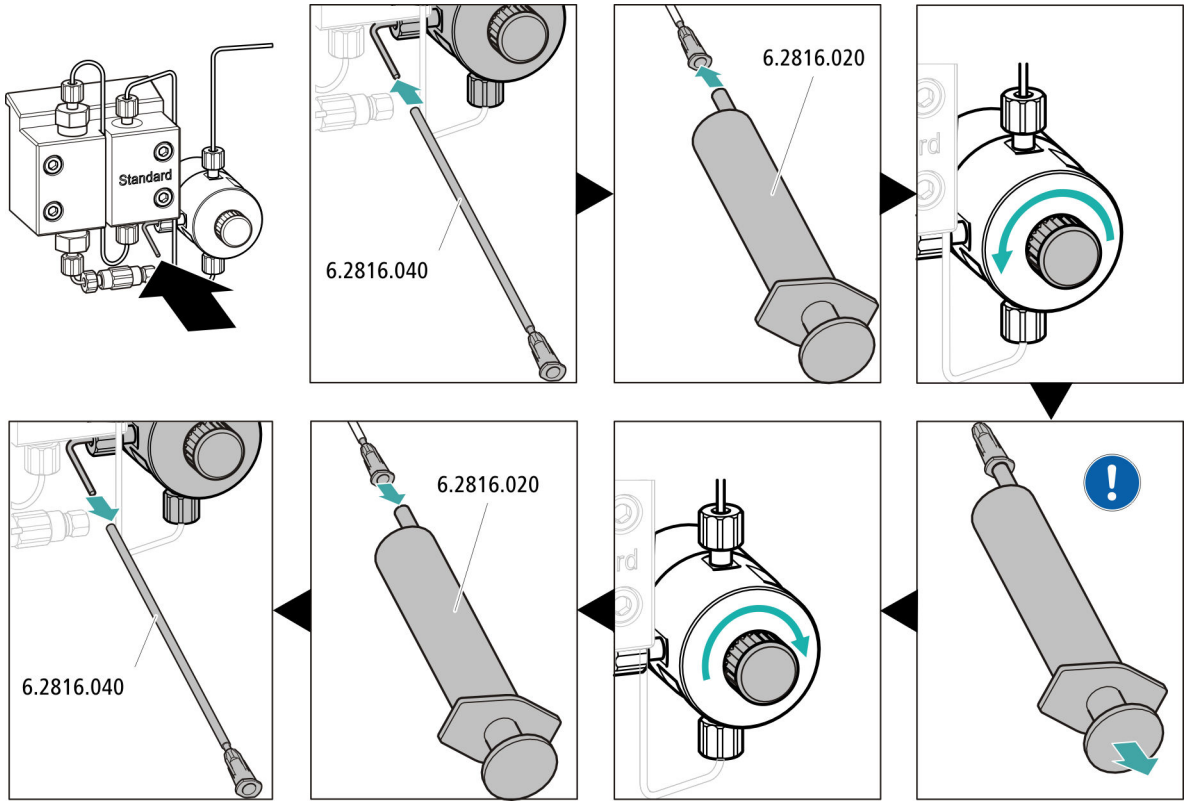

Use the syringe to aspirate eluent until there are no more air bubbles in the eluent aspiration tubing.

5 Adjusting the contact pressure of the peristaltic pump

- Adjust the contact pressure of the peristaltic pump *(see "Setting the contact pressure correctly", page 24)*.

6 Rinsing the instrument without columns

- Rinse the instrument (without columns) with eluent for 10 minutes.

4.19 Connecting and rinsing the guard column

CAUTION

New guard columns are filled with a solution and sealed with stoppers or caps on both sides.

Before inserting the guard column, ensure that this solution can be mixed with the eluent being used (follow the information provided by the manufacturer).

NOTE

The guard column may not be connected until after the instrument has already been put into operation once *(see chapter 4.18, page 26)*. The guard column and the separation column have to be replaced by a coupling (6.2744.040) until then.

Accessories

For this step, you need the following accessories:

- Guard column (suitable for separation column)

Connecting the guard column

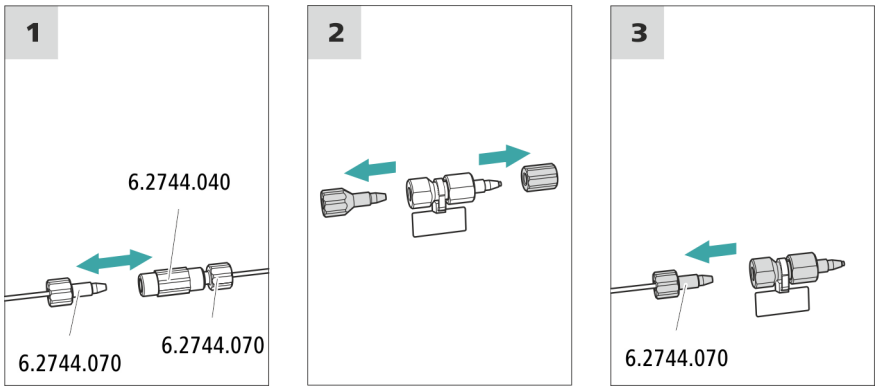

Rinsing the guard column

1 Rinsing the guard column

- Place a beaker under the guard column's outlet.

- Start manual control in MagIC Net and select the high-pressure pump: **Manual ► Manual control ► Pump**
  - **Flow**: **in accordance with column leaflet**
  - **On**
- Rinse the guard column with eluent for approx. 5 minutes.
- Stop the high-pressure pump in the manual control in MagIC Net again: **Off**.

4.20 Connecting the separation column

CAUTION

New separation columns are filled with a solution and sealed with stoppers on both sides. Before inserting the column, ensure that this solution can be mixed with the eluent being used (follow the information provided by the manufacturer).

NOTE

Connect the separation column only after the initial start-up of the instrument. Until that point, insert a coupling (6.2744.040) instead of the guard column and separation column.

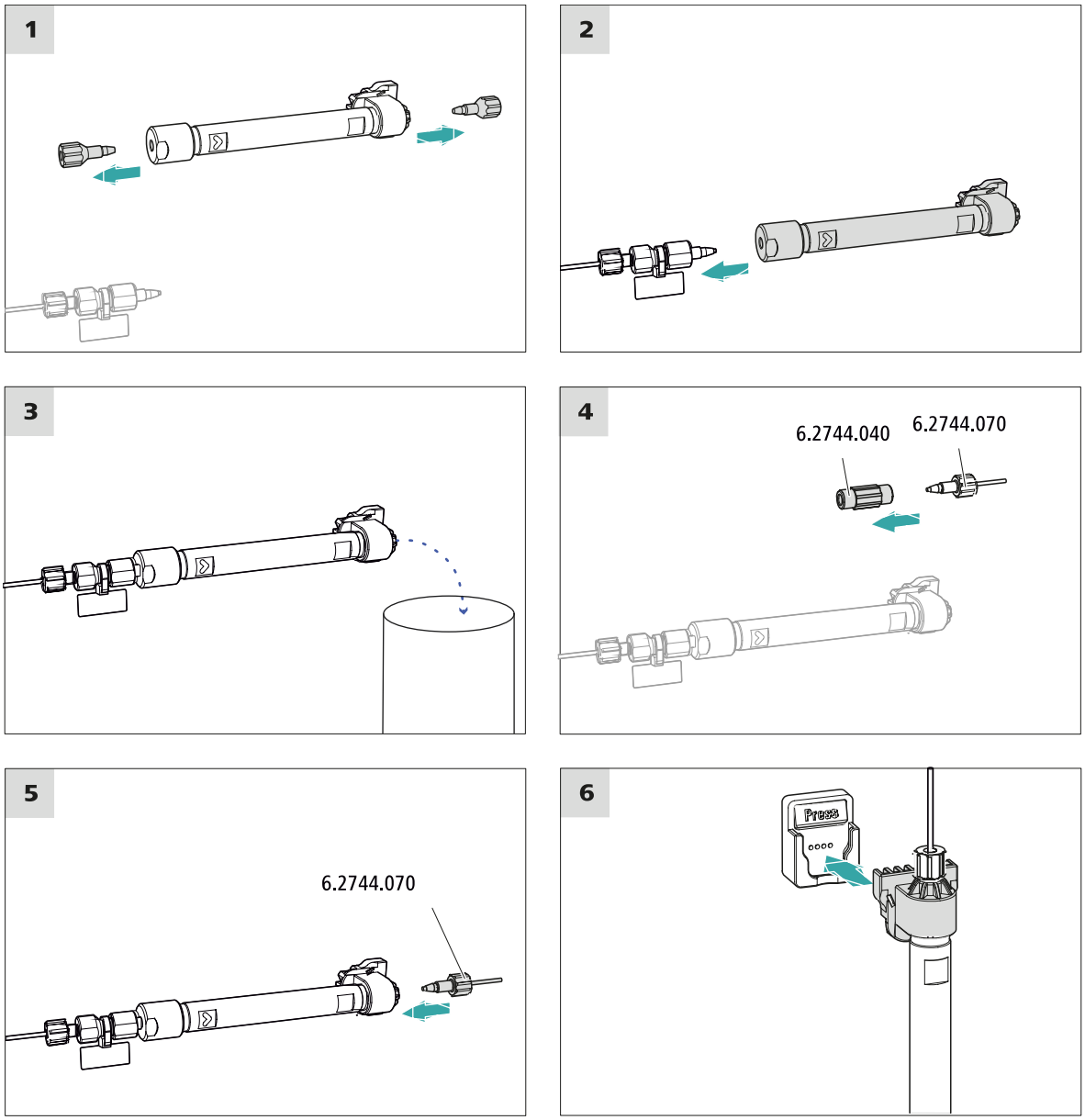

Connecting the separation column

1 Rinsing the separation column

- Place a beaker under the outlet of the separation column.
- Start manual control in MagIC Net and select the high-pressure pump: **Manual ► Manual control ► Pump**
  - **Flow**: Increase gradually up to the flow rate recommended in the column leaflet.
  - **On**
- Rinse the separation column with eluent for approx. 10 minutes.

- Stop the high-pressure pump in the manual control in MagIC Net again: **Off**.

4.21 Conditioning

In the following cases, the system must be conditioned with eluent until a stable baseline has been reached:

- After installation
- After each time the instrument is switched on
- After each eluent change

NOTE

The conditioning time can lengthen considerably if the composition of the eluent is modified.

Conditioning the system

1 Preparing the software

CAUTION

Ensure that the configured flow rate is not higher than the flow rate permitted for the corresponding column (refer to the column leaflet and chip data record).

- Start the **MagIC Net** computer program.
- Open the **Equilibration** tab in MagIC Net: **Workplace ► Run ► Equilibration**.
- Select (or create) a suitable method.
  Also see: *MagIC Net Tutorial* and online help.

2 Preparing the instrument

- Ensure that the column is inserted correctly in accordance with the flow direction marked on the sticker (arrow has to point in the direction of flow).
- Ensure that the eluent aspiration tubing is immersed in the eluent and that there is enough eluent in the eluent bottle.

3 Starting equilibration

- Start the equilibration in MagIC Net: **Workplace ► Run ► Equilibration ► Start HW**.

- Visually inspect whether all capillaries and their connections from the high-pressure pump to the detector are leak-tight. If eluent is leaking out anywhere, tighten the corresponding pressure screw further, or loosen the pressure screw, check the end of the capillary and shorten it using the capillary cutter if necessary and retighten the pressure screw.

4 Conditioning the system

Continue rinsing the system with eluent until the desired stability level for the baseline has been attained .

The instrument is now ready for measuring samples.

5 Operation

The 940 Professional IC Vario ONE/Prep 1 is operated solely using the MagIC Net software. You can find information on operating the software in the tutorial for MagIC Net or in the online help.

6 Accessories

Up-to-date information on the scope of delivery and on optional accessories for your instrument can be found on the Internet. You can download this information using the article number as follows:

Downloading the accessories list

1. Type *https://www.metrohm.com/* into your Internet browser.
2. Under **Find products, accessories, and applications by**, enter the article number (e.g. **2.940.1110**).

   The search result is displayed.
3. Under **Products**, click on **More information**.

   Detailed information regarding the product is shown on various tabs.
4. On the **Included parts** tab, click on **Download the PDF**.

   The PDF file with the accessories data will be created.

NOTE

When you receive your new instrument, we recommend downloading the accessories list from the Internet, printing it out and keeping it together with the manual for reference purposes.

Index

A

Aspiration tubing for eluent 18

B

Baseline
  Condition 32

C

Column
  see "Separation column" 29
Column thermostat
  Installation 17
Computer connection 24
Conditioning 32
Connect
  Connect to power grid 25
  To computer 24

D

Degasser
  Sample degasser 21
Drainage tubing
  Installation 15

E

Electrostatic charge 5
Eluent
  Aspirate 18
Eluent bottle
  Installation 17
Equilibration 27, 31

F

Filter
  see "Inline filter" 20

G

Grip
  Also see "Handle" 12
Guard column
  Installation 28
  Rinse 28

H

Handle 12
Heating
  Also see "Column thermostat" 17
High-pressure pump
  Protection 14

I

IC column
  see "Separation column" 29
Injection valve 3
  Installation 20
Inline filter 20
Installation
  Column thermostat 17
  Drainage tubing 15
  Eluent bottle 17
  Guard column 28
  Injection valve 20
  Leak sensor 16
  Peristaltic pump 22
  Pulsation absorber 20
  Pump tubing 22
  Sample degasser 21
  Separation column 29

L

Leak sensor
  Installation 16
Leak-tightness 27

P

Peristaltic pump
  Installation 22
Power connection 25, 26
Pulsation absorber
  Installation 20
Pump tubing
  Install 22

R

Rinse
  Guard column 28
  Separation column 30

S

Safety instructions 4
Sample degasser
  Installation 21
Separation column
  Installation 29
  Protection 3, 20
  Rinse 30
Service 4
Supply voltage 5

T

Thermostat
  Also see "Column thermostat" 17
Transport
  Grip 12
Transport locking screws 13

V

Vacuum pump
  Protection 14
Valve
  See also "Injection valve" 20