930 Compact IC Flex

930 Compact IC Flex Oven/ChS/PP/Deg

Manual – Short Instructions

8.930.8116EN / v3 / 2023-12-31

Metrohm

Metrohm AG
CH-9100 Herisau
Switzerland
Phone +41 71 353 85 85
Fax +41 71 353 89 01
info@metrohm.com
www.metrohm.com

930 Compact IC Flex

930 Compact IC Flex Oven/ChS/PP/Deg

2.930.2360

Manual – Short Instructions

8.930.8116EN / v3 / 2023-12-31

Technical Communication
Metrohm AG
CH-9100 Herisau
techcom@metrohm.com

This documentation is protected by copyright. All rights reserved.

This documentation has been prepared with great care. However, errors can never be entirely ruled out. Please send comments regarding possible errors to the address above.

Table of contents

1 About these short instructions 1

2 Introduction 2

2.1 Instrument description 2

2.2 Intended use 4

2.3 Safety instructions 4

2.3.1 General notes on safety 4

2.3.2 Electrical safety 5

2.3.3 Tubing and capillary connections 6

2.3.4 Flammable solvents and chemicals 6

2.3.5 Recycling and disposal 6

2.4 Symbols and conventions 7

3 Overview of the instrument 8

3.1 Front 8

3.2 Rear 10

4 Installation 12

4.1 Setting up the instrument 12

4.1.1 Packaging 12

4.1.2 Checks 12

4.1.3 Location 12

4.2 Capillary connections in the IC system 12

4.3 Removing transport locking screws 13

4.4 Connecting the drainage tubing and leak sensor 15

4.4.1 Installing the drainage tubing 15

4.4.2 Connecting the leak sensor 16

4.5 Column oven 17

4.6 Connecting the eluent bottle 17

4.7 Connecting the eluent degasser 20

4.8 Installing the high-pressure pump 20

4.9 Installing an inline filter 20

4.10 Installing the pulsation absorber 20

4.11 Injection valve 20

4.12 Metrohm Suppressor Module (MSM) 20

4.12.1 Inserting the rotors 21

4.12.2 Connecting the Metrohm Suppressor Module (MSM) 22

4.13 Peristaltic pump **25**
4.13.1 Installing the peristaltic pump 25
4.14 Installing the conductivity detector **27**
4.15 Installing the amperometric detector **27**
4.16 Connecting the sample degasser (optional) **28**
4.17 Connecting the instrument to a computer **29**
4.18 Connecting the instrument to the power grid **30**
4.19 Initial start-up **31**
4.20 Connecting and rinsing the guard column **33**
4.21 Connecting the separation column **34**
4.22 Conditioning **36**

5 Operation **38**

6 Accessories **39**

Index **40**

Table of figures

Figure 1 Front 8
Figure 2 Rear 10
Figure 3 Removing the transport locking screws 14
Figure 4 Installing the tubing weighting and aspiration filter 19
Figure 5 Metrohm Suppressor Module (MSM) – Connection capillaries 23

1 About these short instructions

This short instruction manual contains important chapters from the comprehensive manual. In addition to an introduction, safety instructions and an overview of the instrument, you will also find information about installing and operating the 930 Compact IC Flex Oven/ChS/PP/Deg as well as information regarding the warranty. You can download the comprehensive manual as a PDF file from the Internet.

Downloading the manual

You can find the detailed manual on the Internet under *http://www.metrohm.com/*:

1. Enter the order number for your instrument as the search term (e.g. **2.930.2360**).
2. Click on **>More information**.
3. Click on **Documents**.
   All available documents for the instrument will be displayed.
4. Click on the PDF link to download the desired manual.

2 Introduction

2.1 Instrument description

The 930 Compact IC Flex is a robust ion chromatograph. It is distinguished by:

- Its intelligence: All of the functions are monitored, optimized and documented in an FDA-compatible manner. Intelligent components, such as iColumns, save important data onto a chip.
- Its compact design: It has a small footprint.
- Its transparency: All components are easily accessible and located for simple visibility and can be monitored during operation through a large window.
- Its safety: The wet end and the electronics are physically separated. This prevents fluids from coming into contact with the electronics to a large extent. A leak sensor is integrated into the wet end.
- Its environmental compatibility.
- Its low noise emission.
- The intelligent MagIC Net software.

The 930 Compact IC Flex is operated using the MagIC Net software. A USB cable is used to connect the device to a computer with MagIC Net installed. The intelligent software detects the device automatically and checks its functionality. The software controls and monitors the device, evaluates the measured data and manages it in a database.

The 930 Compact IC Flex Oven/ChS/PP/Deg consists of the following modules:

Housing

The sturdy housing contains the instrument's electronic components, including their interfaces and one connector for a separation column. In addition, the housing provides space for a conductivity detector or an amperometric detector. Capillaries and cables can be fed into and out of the instrument through several openings.

Leak sensor

The leak sensor detects leaking liquid that collects in the instrument's base tray. Liquid that leaks in the instrument is routed to the base tray using drainage tubing and detected there.

Column oven

The column oven regulates the temperature for the separation column and the eluent, thereby providing stable measuring conditions. There is a column holder with chip reader in the column oven.

Eluent degasser

The eluent degasser removes gas bubbles and dissolved gases from the eluent.

High-pressure pump

The intelligent and low-pulsation high-pressure pump pumps the eluent through the IC system. It is equipped with a chip where its technical specifications and "life history" (operating hours, service data, etc.) are stored.

Inline filter

Inline filters protect the separation column reliably from potential contamination from the eluent. The filter pads with 2 µm pore size can be replaced quickly and easily. They remove particles from the solutions, such as bacteria and algae.

Pulsation absorber

The pulsation absorber protects the separation column from damage caused by pressure fluctuations, e.g. when the injection valve is switched, and reduces interfering pulsations during highly sensitive measurements.

Injection valve

The injection valve connects the eluent path to the sample path. By a quick and precise switching of the valve, a quantity of sample solution defined by the size of the sample loop is injected and flushed to the separation column with the eluent.

Metrohm Suppressor Module (MSM)

The chemical suppressor MSM consists of the suppressor drive, a rotor and, where applicable, an adapter. The suppressor drive gives you the flexibility to use different rotors according to the principle "one drive – many rotors". Suppression rotors with different capacities and construction or a rotor for sample preparation (SPM Rotor) are readily interchangeable with appropriate adapters as needed. The rotors are not included in the instrument's scope of delivery. The rotor required for the application and any adapter that is required must be ordered separately.

Peristaltic pump

The peristaltic pump is used for pumping sample and auxiliary solutions. It can rotate in both directions.

Detector

Metrohm offers a series of different detectors for various analysis tasks. A suitable detector type must be ordered as a separate device.

Sample degasser

The sample degasser removes gas bubbles and dissolved gases from the sample.

Separation column

The intelligent separation column separates different components according to their interactions with the column. Metrohm separation columns are equipped with a chip where their technical specifications and history (start-up, operating hours, injections etc) are stored.

2.2 Intended use

The 930 Compact IC Flex Oven/ChS/PP/Deg is used for the determination of anions or polar substances with chemical suppression using ion chromatography.

It can also be used as needed for the determination of cations, polar substances or anions without chemical suppression.

This instrument is suitable for processing chemicals and flammable samples. Therefore, the use of the 930 Compact IC Flex requires the user to have basic knowledge and experience in handling toxic and caustic substances. Knowledge regarding the application of fire prevention measures prescribed for laboratories is also mandatory.

2.3 Safety instructions

2.3.1 General notes on safety

WARNING

Operate this instrument only according to the information contained in this documentation.

This instrument left the factory in a flawless state in terms of technical safety. To maintain this state and ensure non-hazardous operation of the instrument, the following instructions must be observed carefully.

2.3.2 Electrical safety

The electrical safety when working with the instrument is ensured as part of the international standard IEC 61010.

WARNING

Only personnel qualified by Metrohm are authorized to carry out service work on electronic components.

WARNING

Never open the housing of the instrument. The instrument could be damaged by this. There is also a risk of serious injury if live components are touched.

There are no parts inside the housing which can be serviced or replaced by the user.

Supply voltage

WARNING

An incorrect supply voltage can damage the instrument.

Only operate this instrument with a supply voltage specified for it (see rear panel of the instrument).

Protection against electrostatic charges

WARNING

Electronic components are sensitive to electrostatic charges and can be destroyed by discharges.

Do not fail to pull the power cord out of the power socket before you set up or disconnect electrical plug connections at the rear of the instrument.

The device is to be operated only with the door closed.

2.3.3 Tubing and capillary connections

CAUTION

Leaks in tubing and capillary connections are a safety risk. Tighten all connections well by hand. Avoid applying excessive force to tubing connections. Damaged tubing ends lead to leakage. Appropriate tools can be used to loosen connections.

Check the connections regularly for leakage. If the instrument is used mainly in unattended operation, then weekly inspections are mandatory.

2.3.4 Flammable solvents and chemicals

WARNING

All relevant safety measures are to be observed when working with flammable solvents and chemicals.

- Set up the instrument in a well-ventilated location (e.g. fume cupboard).
- Keep all sources of flame far from the workplace.
- Clean up spilled liquids and solids immediately.
- Follow the safety instructions of the chemical manufacturer.

2.3.5 Recycling and disposal

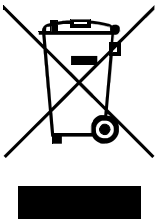

Properly dispose of chemicals and of the product to reduce negative effects on the environment and public health. Local authorities, waste disposal companies or dealers provide more detailed information on disposal. Observe the WEEE EU directive (WEEE = Waste Electrical and Electronic Equipment) for the proper disposal of waste electronic equipment within the European Union.

2.4 Symbols and conventions

The following symbols and formatting may appear in this documentation:

*(5-**12**)*	**Cross-reference to figure legend** The first number refers to the figure number, the second to the instrument part in the figure.
1	**Instruction step** Carry out these steps in the sequence shown.
Method	**Dialog text**, **parameter** in the software
File ▶ New	Menu or menu item
[Next]	**Button** or **key**
	WARNING This symbol draws attention to a possible life-threatening hazard or risk of injury.
	WARNING This symbol draws attention to a possible hazard due to electrical current.
	WARNING This symbol draws attention to a possible hazard due to heat or hot instrument parts.
	WARNING This symbol draws attention to a possible biological hazard.
	CAUTION This symbol draws attention to possible damage to instruments or instrument parts.
	NOTE This symbol highlights additional information and tips.

3 Overview of the instrument

3.1 Front

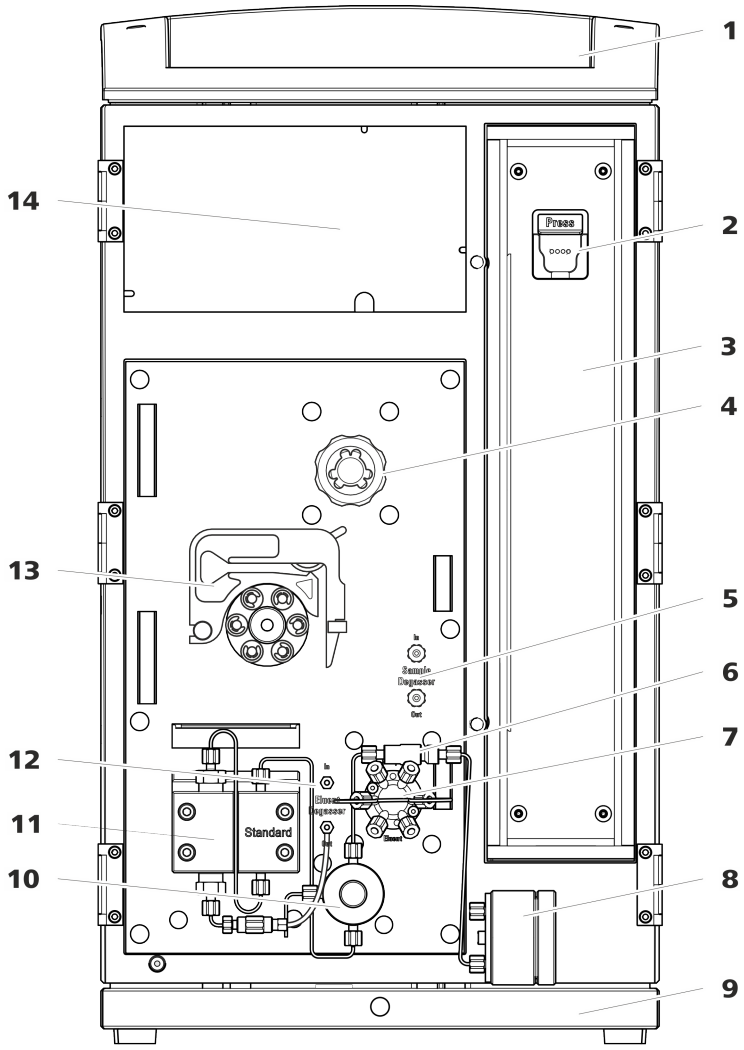

Figure 1 Front

1	**Bottle holder** Offers space for the eluent bottle and additional accessories.	**2**	**Column holder** For hanging the separation column (iColumn). With column recognition.
3	**Column oven**	**4**	**Metrohm Suppressor Module (MSM)**
5	**Sample degasser**	**6**	**Inline filter**
7	**Injection valve**	**8**	**Pulsation absorber**

9	**Base tray** With leak sensor.
10	**Purge valve** For deaerating the high-pressure pump. With rotary knob in the center and pressure sensor.
11	**High-pressure pump** Pumps the eluent through the IC system.
12	**Eluent degasser**
13	**Peristaltic pump**
14	**Detector chamber** Offers space for an embedded detector and additional accessories.

3.2 Rear

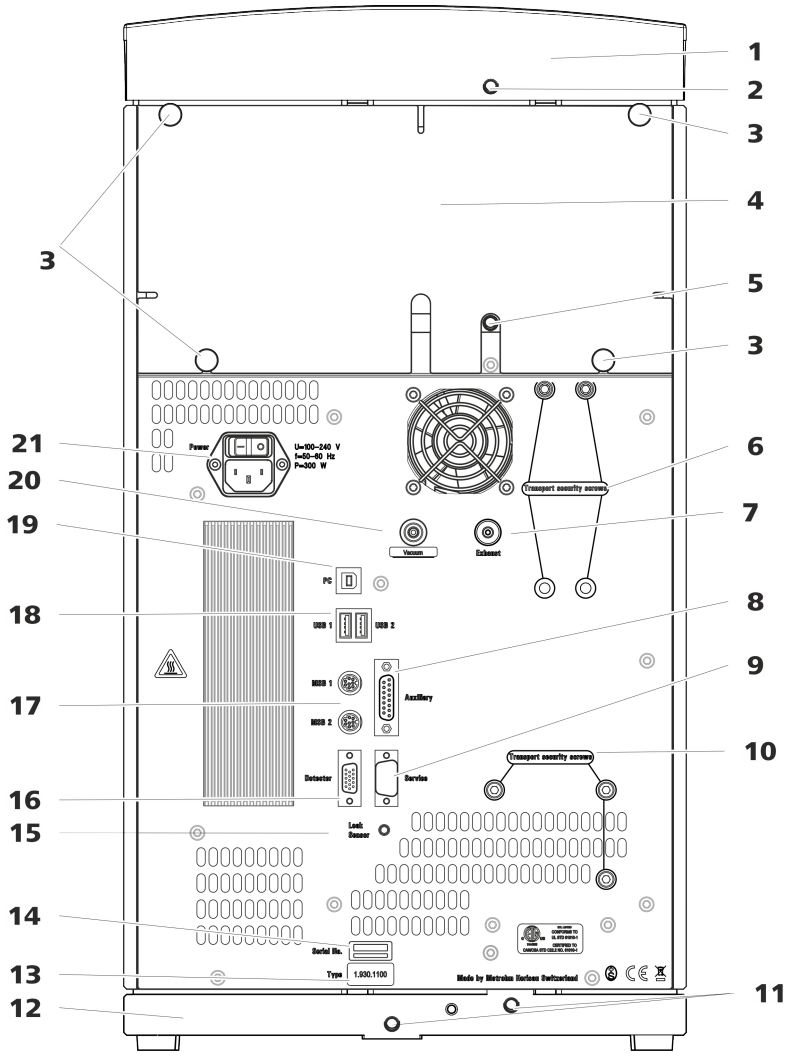

Figure 2 Rear

1	**Bottle holder**	**2**	**Drainage tubing connection** For connecting the drainage tubing, which guides escaped fluids away from the bottle holder.
3	**Knurled screws** For fastening the removable back panel.	**4**	**Back panel** Removable. Enables access to the detector chamber.
5	**Drainage tubing connection** For connecting the drainage tubing, which guides escaped liquids away from the detector chamber.	**6**	**Transport locking screws** For securing the vacuum pump when transporting the instrument.

7	**Exhaust opening** Labeled *Exhaust*. For extracting the air from the vacuum chamber.
8	**Auxiliary connection socket** For connecting an 891 Professional Analog Out (2.891.0010).
9	**Service connection socket** For Metrohm service only.
10	**Transport locking screws** For securing the high-pressure pump when transporting the instrument.
11	**Drainage tubing connections** For connecting two drainage tubings that guide the escaped fluid to the leak sensor and from there to the waste container.
12	**Base tray** With leak sensor.
13	**Type plate**
14	**Serial number**
15	**Leak sensor connection socket** Labeled *Leak Sensor*. For connecting the leak sensor connection cable.
16	**Detector connection socket** Labeled *Detector*. For connecting Metrohm detectors.
17	**MSB connection sockets** Labeled *MSB 1* and *MSB 2*. For connecting MSB devices.
18	**USB connection sockets** Labeled *USB 1* and *USB 2*. For connecting USB devices.
19	**PC connection socket** For connecting the instrument to the computer with the USB cable (6.2151.020).
20	**Vacuum connection** Plugged with a stopper.
21	**Power socket** Power socket for connecting the power cable and power switch for switching the instrument on and off.

4 Installation

4.1 Setting up the instrument

4.1.1 Packaging

The instrument is supplied in protective packaging together with the separately packed accessories. Keep this packaging, as only this ensures safe transportation of the instrument.

4.1.2 Checks

Immediately after receipt, check whether the shipment has arrived complete and without damage by comparing it with the delivery note.

4.1.3 Location

The instrument has been developed for operation indoors and may not be used in explosive environments.

Place the instrument in a location of the laboratory which is suitable for operation, free of vibrations, protected from corrosive atmosphere, and contamination by chemicals.

The instrument should be protected against excessive temperature fluctuations and direct sunlight.

4.2 Capillary connections in the IC system

Capillary connections

NOTE

Sprays of chemicals caused by capillaries slipping out

If you work with an increased system pressure (> 15 MPa), capillaries may slip out of the pressure screws. This can lead to sprays of chemicals.

To avoid this, we recommend

- degreasing the ends of the capillaries before installing them. Dampen a cloth with acetone and wipe off the ends of the capillaries before connecting them with the pressure screws.
- tightening the pressure screws firmly using a wrench (6.2739.000).

In order to achieve optimum analysis results, capillary connections in an IC system must be absolutely tight and free of dead volume. Dead volume

occurs if two capillary ends connected to each other do not fit exactly, thus allowing liquid to escape. There are two possible causes for this:

- The capillary ends do not have exactly flat edges.
- The two capillary ends do not completely meet.

One prerequisite for dead-volume-free capillary connection is that both capillary ends are cut exactly flat. Therefore we recommend cutting PEEK capillaries only with a capillary cutter (6.2621.080).

Also see: *Cutting capillaries* video on the Internet *http://ic-help.metrohm.com*.

Creating dead-volume-free capillary connections

To create dead-volume-free capillary connections, proceed as follows:

1. Wipe off the end of the capillary with a cloth dampened with acetone.
2. Slide the pressure screw over the capillary. Ensure that the capillary protrudes 1 to 2 mm from the tip of the pressure screw.
3. Push the capillary into the connection or coupling as far as it will go and hold it there.
4. Only then start turning the pressure screw. Hold the capillary in the stop position while turning it shut.

4.3 Removing transport locking screws

To avoid damage to the drives for the high-pressure pump and the vacuum pump during transport, the pumps are secured with transport locking screws. These are located at the rear of the instrument and labeled with **Transport security screws**.

Remove these transport locking screws before the initial start-up.

Accessories

For this step you need:

- 4 mm hex key (6.2621.030)

Removing the transport locking screws

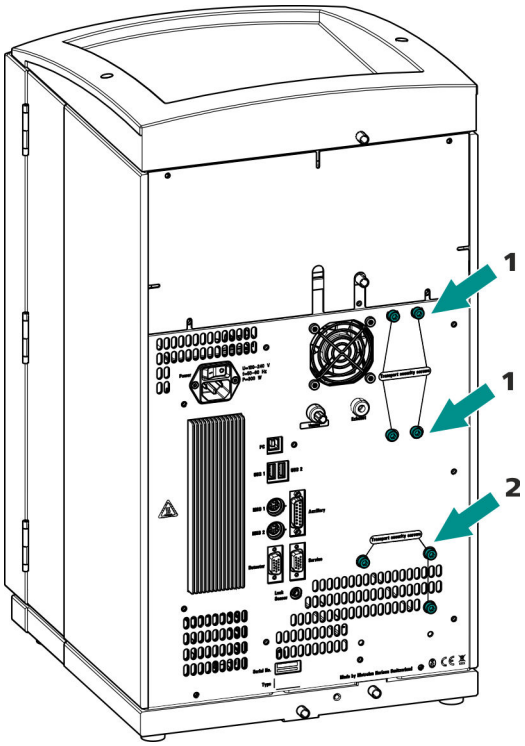

Figure 3 Removing the transport locking screws

1	**Transport locking screws** For the vacuum pump. Only present if the instrument has a degasser or a CO_2 Suppressor (MCS).
2	**Transport locking screws** For the high-pressure pump.

Store the transport locking screws in a safe place. Reinsert the transport locking screws each time you transport the instrument a significant distance.

CAUTION

The pumps may be damaged if you transport the instrument without inserting the transport locking screws.

4.4 Connecting the drainage tubing and leak sensor

The leak sensor detects leaking liquid that collects in the instrument's base tray. Liquid that leaks in the bottle holder or in the detector chamber is conveyed to the base tray using drainage tubing and is detected there.

If the leak sensor detects a leak in the IC system, the IC instrument is switched off. The software displays a warning.

The leak sensor functions properly only if the following preconditions are met:

- The drainage tubing is connected.
- The leak sensor connection cable is inserted into the leak sensor connection socket.
- The 930 Compact IC Flex is switched on.
- The leak sensor is switched to **active** in the software.

4.4.1 Installing the drainage tubing

Liquid that leaks in the bottle holder or detector chamber flows to the rear of the instrument. Openings on the bottle holder and in the detector chamber allow the liquid to drain. The drainage tubing has to be mounted at these openings. This drainage tubing guides the leaking liquid to the base tray where the leak sensor is located.

Accessories

For this step you need the following parts from the accessory kit: Vario/Flex Basic (6.5000.000):

- 2 × silicone tubing (6.1816.020)
- Y connector (6.1807.010)

You also need scissors.

Connecting the drainage tubing

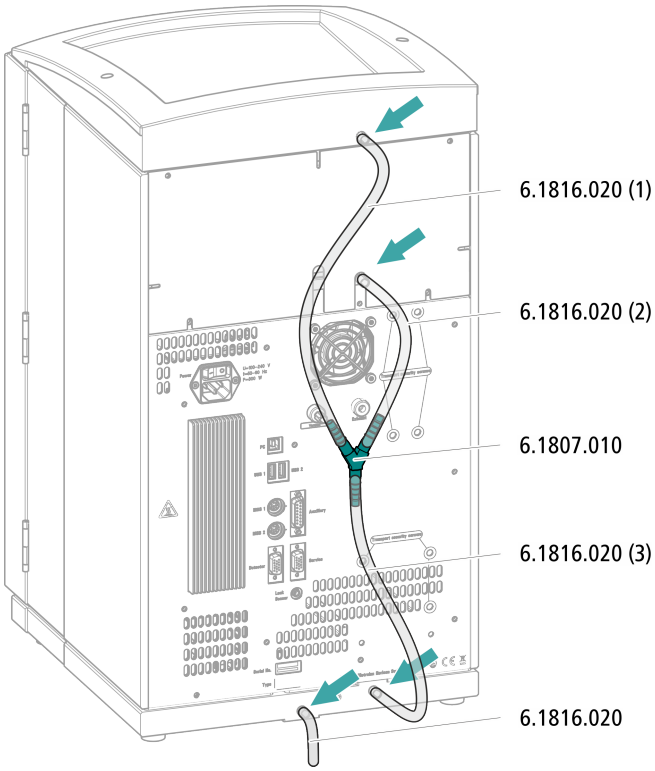

4.4.2 Connecting the leak sensor

Plugging in the leak sensor connection cable

The leak sensor connection cable is coiled up in the base tray.

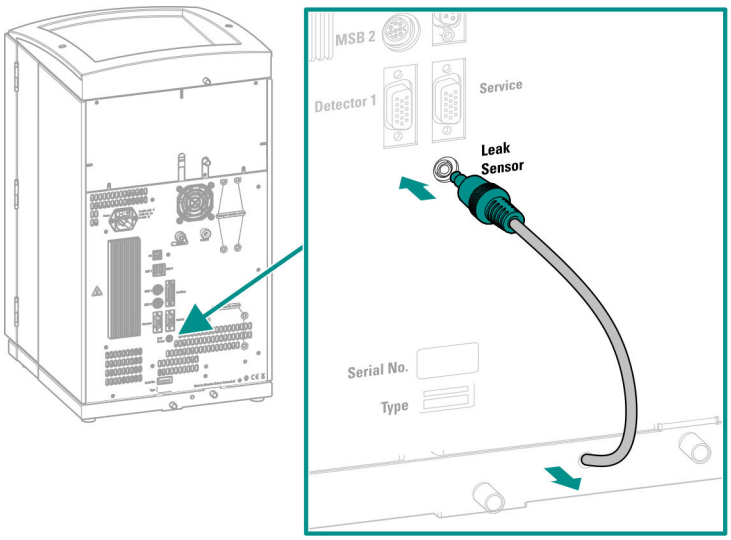

4.5 Column oven

The column oven is completely connected. No installation work is required.

4.6 Connecting the eluent bottle

The eluent is aspirated out of the eluent bottle via the eluent aspiration tubing . The eluent aspiration tubing is installed on the entry to the eluent degasser.

Accessories

For this step, you need the following accessories:

These parts are part of the *Vario/Flex ONE* accessory kit (6.5000.010).

- Eluent bottle (6.1608.070)
- The *eluent bottle cap GL 45* accessory set (6.1602.160)
  This accessory set contains the bottle cap, an M6 tubing nipple, an M8 tubing nipple, two O-rings and an M6 and M8 threaded stopper.
- The *tubing adapter for aspiration filter* accessory set (6.2744.210)
  This accessory set contains a filter holder, a clamping screw and tubing weighting.
- An aspiration filter (6.2821.090)
- The adsorber tube (6.1609.000)
- The SGJ clip (6.2023.020)

Connecting the eluent aspiration tubing

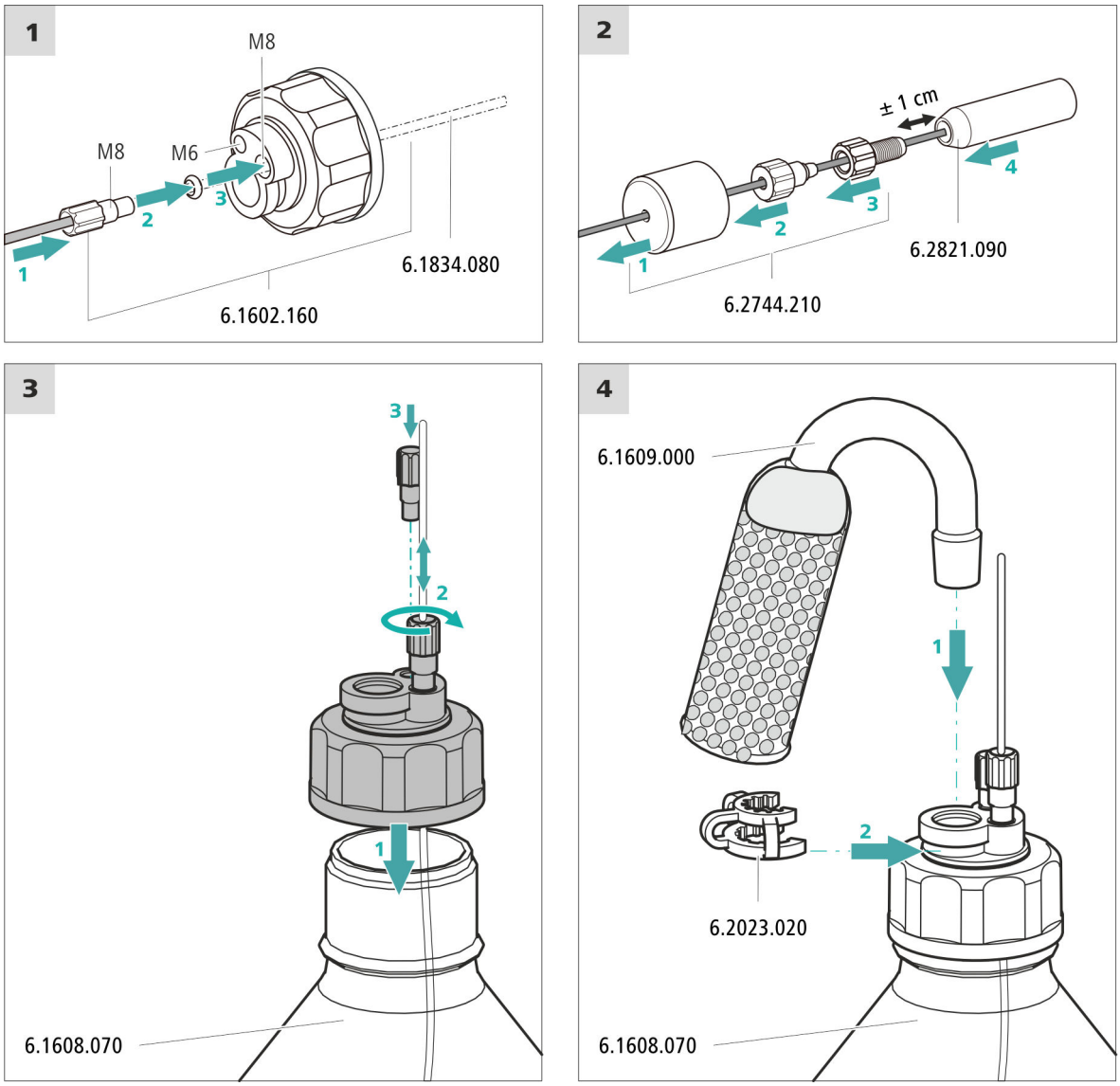

1 Pre-rinsing the aspiration filter

NOTE

Always wear gloves when handling the aspiration filter.

In order to avoid air bubbles after the installation of the aspiration filter, we recommend pre-rinsing the aspiration filter with ultrapure water or eluent.

For pre-rinsing, you will need the adapter Luer inner, M6 outer (6.02744.050), a syringe and a vessel with ultrapure water or eluent.

- Screw the adapter to the aspiration filter.
- Insert the syringe into the adapter.

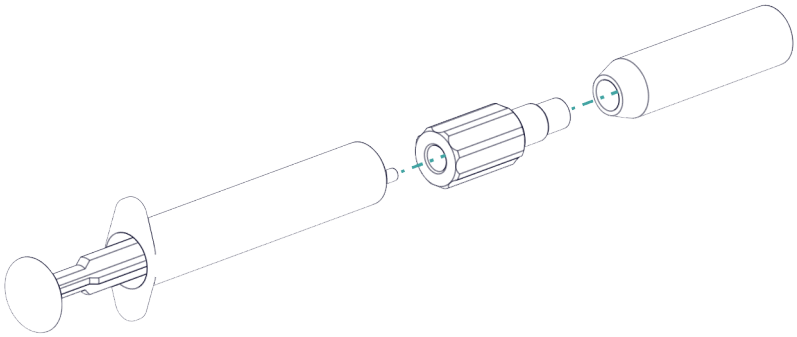

- Immerse the aspiration filter tin a vessel with ultrapure water or eluent.
- Fill the syringe completely with ultrapure water or eluent 3 times and then empty it again each time.

2 Mounting the aspiration filter

NOTE

Always wear gloves when handling the aspiration filter.

- Place the loose end of the eluent aspiration tubing into the aspiration filter.
  The end of the tubing should reach approximately to the center of the aspiration filter.
- Tighten the aspiration filter to the filter holder.

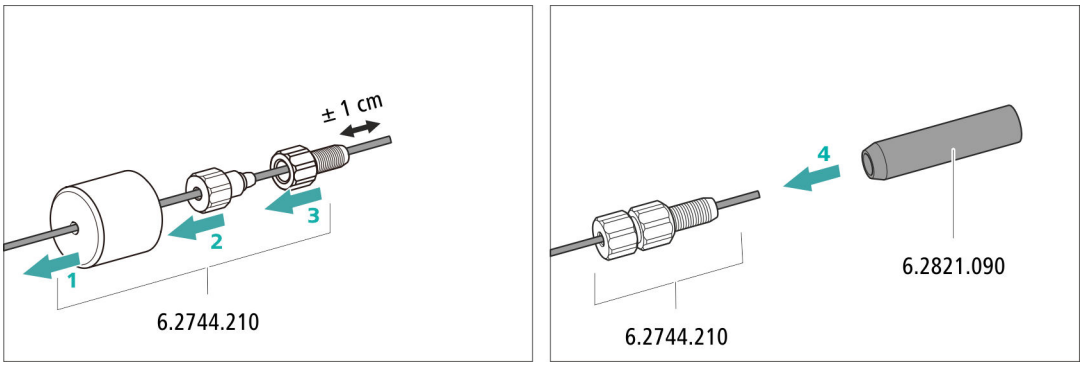

Figure 4 Installing the tubing weighting and aspiration filter

4.7 Connecting the eluent degasser

The eluent degasser is completely connected. No installation work is required.

4.8 Installing the high-pressure pump

The high-pressure pump is completely connected. No installation work is required.

4.9 Installing an inline filter

The inline filter is completely connected. No installation work is required.

4.10 Installing the pulsation absorber

The pulsation absorber is installed between the high-pressure pump and the injection valve. It protects the separation column from damage caused by pressure fluctuations, e.g. when the injection valve is switched, and reduces interfering pulsations during highly sensitive measurements.

The pulsation absorber is completely connected. No installation work is required.

4.11 Injection valve

The injection valve is completely connected. No installation work is required.

4.12 Metrohm Suppressor Module (MSM)

The suppressor drive of the 930 Compact IC Flex can hold various rotors. The large rotors, such as the MSM-HC Rotor A (6.2842.000) and the MSM-HC Rotor C (6.2842.200) can be inserted directly.

The small rotors, such as the MSM Rotor A (6.2832.000) and the MSM-LC Rotor A (6.2844.000), must first be fitted into the adapter (6.2842.020), which can then be inserted into the suppressor housing.

A connecting piece (6.2835.010) is used for all rotors for connecting the Metrohm Suppressor Module (MSM) to the IC system.

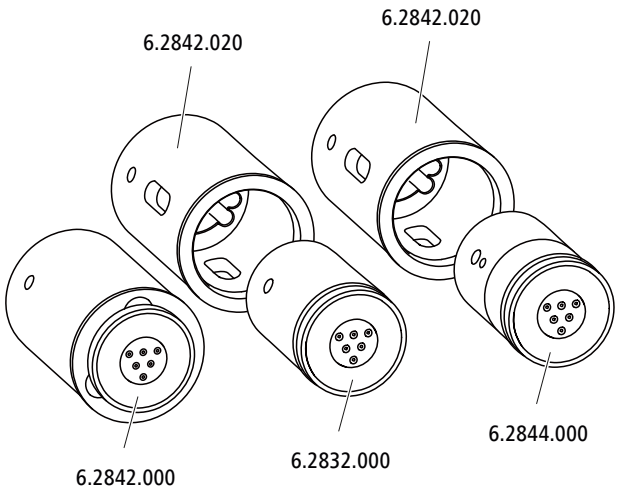

NOTE

The instruments are supplied without rotor and without adapter.

The suitable rotor and the adapter, if required, must be ordered separately.

4.12.1 Inserting the rotors

Accessories

For this step, you need the following accessories:

- For suppression: MSM Rotor A (6.2832.000) or MSM-HC Rotor A (6.2842.000), MSM-LC Rotor A (6.2844.000) or MSM-HC Rotor C (6.2842.200) or MSM-HC Rotor C (6.2842.200)
- Optional: Adapter (6.2842.020)
- Connecting piece (6.2835.010)

Large rotors can be inserted directly into the rotor housing.

CAUTION

The rotor may be destroyed during start-up if not inserted correctly.

Therefore, follow the following instructions exactly.

Inserting large rotors

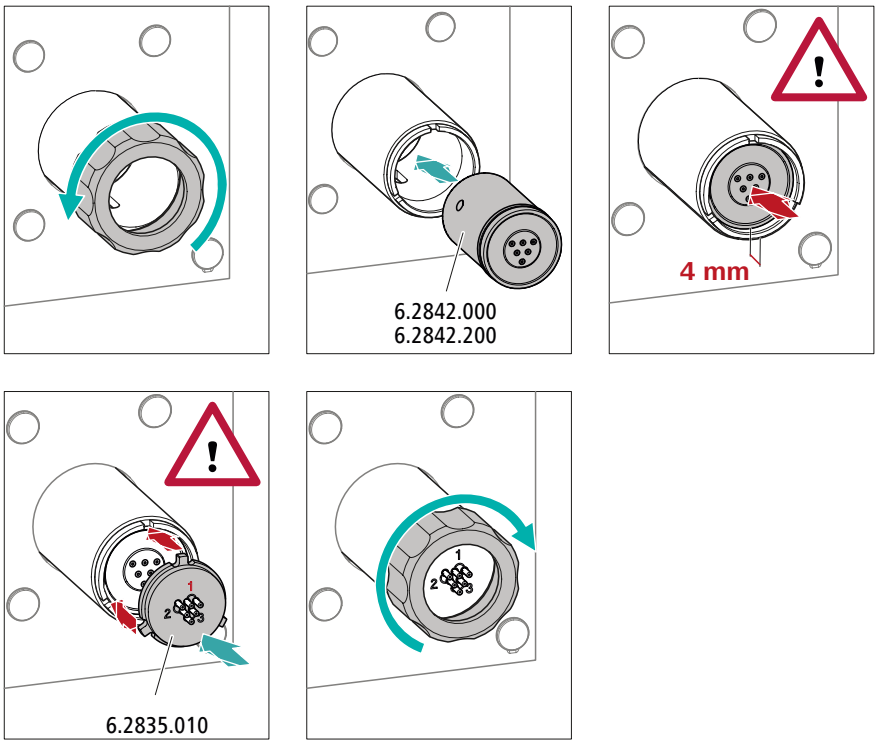

Inserting small rotors

You need the adapter (6.2842.020) in order to insert a small rotor into the suppressor drive.

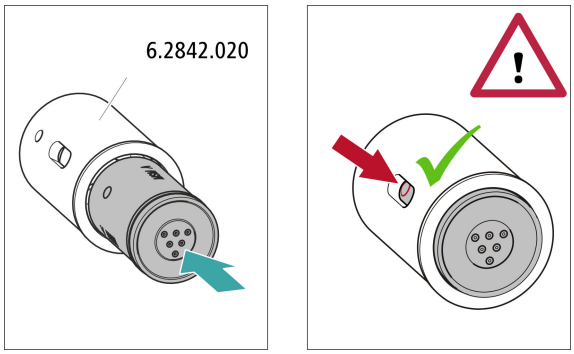

4.12.2 Connecting the Metrohm Suppressor Module (MSM)

The three entries and exits of the suppressor units, numbered 1, 2 and 3 on the connecting piece, each have two permanently installed PTFE capillaries.

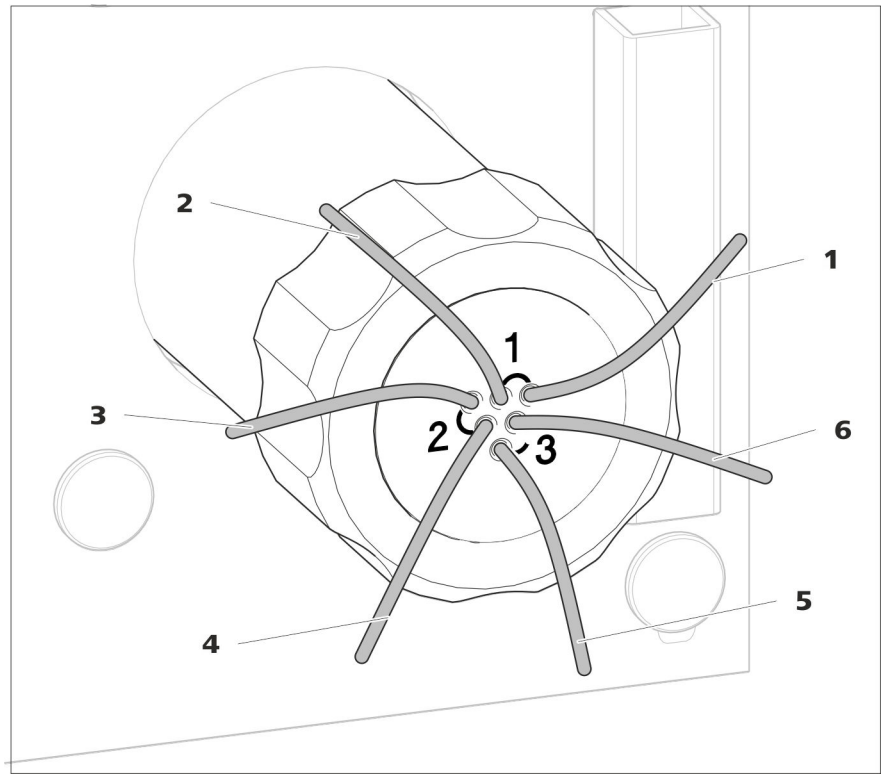

Figure 5 Metrohm Suppressor Module (MSM) – Connection capillaries

1	**out** Outlet capillary for the eluent.	**2**	**in** Inlet capillary for the eluent.
3	**regenerant** Inlet capillary for the regeneration solution.	**4**	**waste reg.** Outlet capillary for the regeneration solution; to the waste container.
5	**waste rins.** Outlet capillary for the rinsing solution; to the waste container.	**6**	**rinsing solution** Inlet capillary for the rinsing solution.

Recommended installation

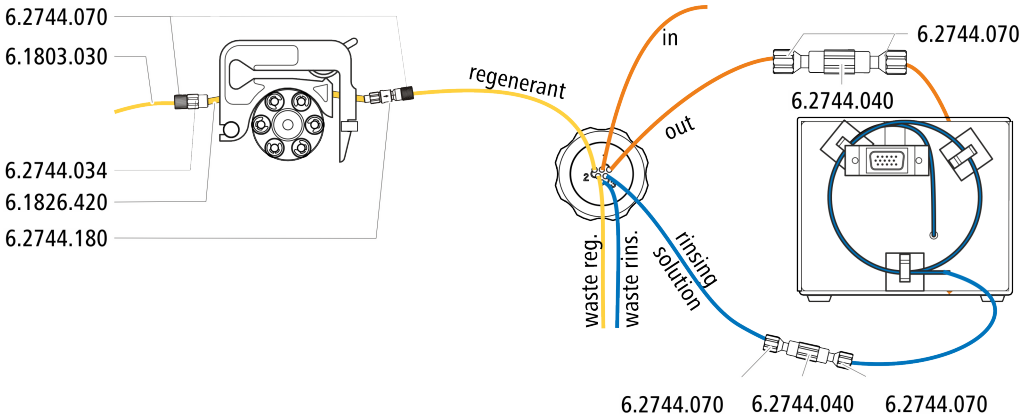

Alternative installation

For the alternative installation, a second tubing cartridge (6.2755.000) is required that must be ordered separately with the following accessories:

- Tubing cartridge (6.2755.000)
- Coupling olive/UNF 10/32 2x (6.2744.034)
- Pump tubing connection with locking nut and filter (6.2744.180)
- Pump tubing PharMed® (orange/yellow) 3 stoppers (6.1826.420)
- Glass bottle / 1000 mL / GL 45 (6.1608.020)
- Bottle cap / GL 45 - 3 × UNF 10/32 (6.1602.150)
- PTFE capillary, 0.5 mm inner diameter / 3 m (6.1803.030)

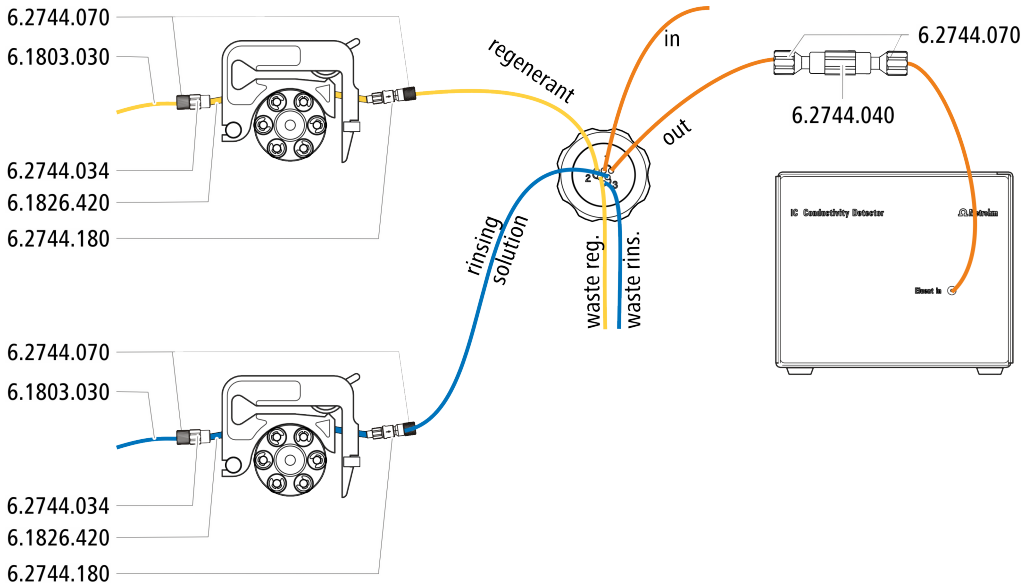

4.12.2.1 Installing bottles with auxiliary solutions

Accessories

To connect the bottles of the auxiliary solutions, you will need the following accessories:

- Accessories from the accessory kit: IC Vario/Flex ChS (6.5000.030)

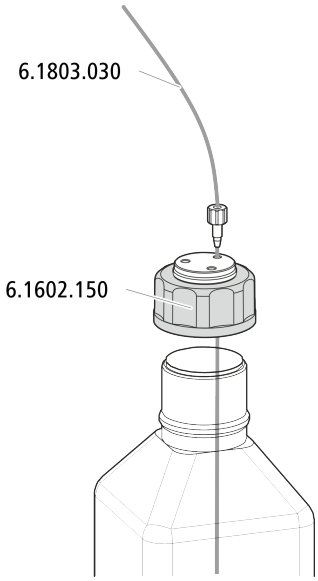

4.13 Peristaltic pump

4.13.1 Installing the peristaltic pump

Installing the pump tubing

Pump tubing can differ in terms of material, diameter and thus flow rate. Different pump tubing is used depending on the application.

Selecting the pump tubing and adapter

1. Select pump tubing suitable for the application .
2. Select an adapter suitable for the pump tubing. The adapters are included with the pump tubing connection with locking nut and filter (6.2744.180).

Installing the pump tubing

For this step, you need the following accessories:

- Tubing cartridge (6.2755.000)
- Pump tubing (6.1826.XXX)
- Coupling olive/UNF 10/32 (6.2744.034)
- Pump tubing connection with locking nut and filter (6.2744.180): Includes a locknut, 3 adapters and a tubing olive with filter holder.
- 2 × pressure screw, short (6.2744.070)

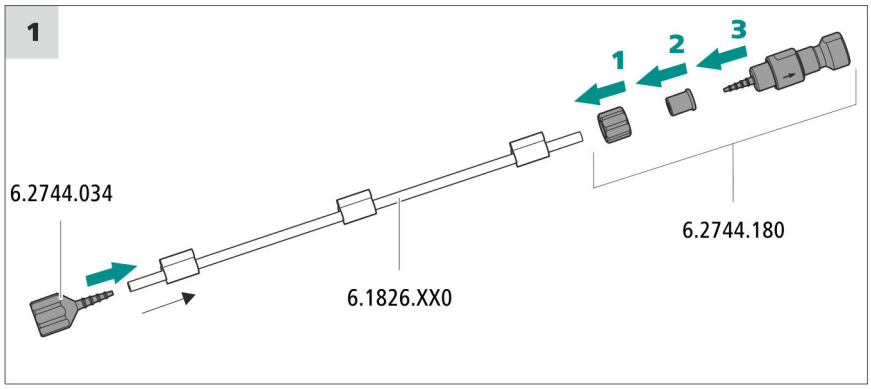

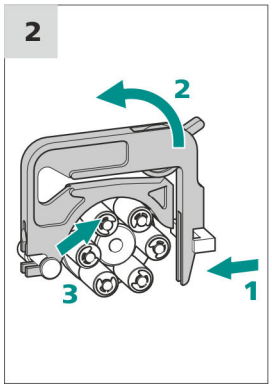

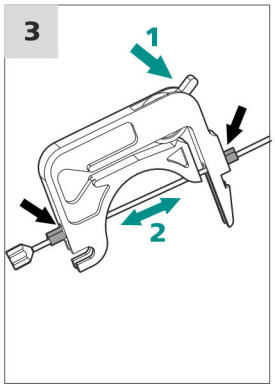

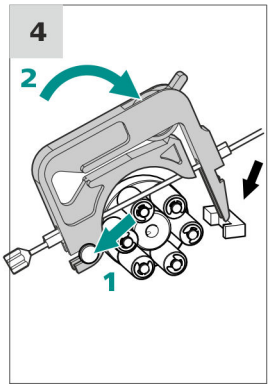

Setting the contact pressure correctly

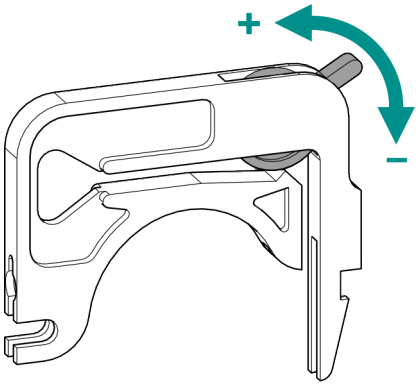

1
- Fully loosen the contact pressure lever , i.e. press it all the way down.
- In the software, activate the drive of the peristaltic pump with the desired speed.
- Raise the contact pressure lever one step at a time until liquid flows.
- When liquid starts flowing, raise the contact pressure lever by an additional two ratchet increments.

The contact pressure is now set optimally.

4.14 Installing the conductivity detector

The 930 Compact IC Flex provides enough space for one detector and additional accessories in the detector chamber. The detector is available as separate device and is supplied with a separate manual.

Placing the detector in the instrument

Follow the instructions in the chapter *Inserting the detector* in the manual for the detector.

Connecting the detector to the eluent path

NOTE

The separation column is not inserted into the instrument until it is being started up for the first time. Until then, the detector inlet capillary has to be connected to the *out* capillary of the Metrohm Suppressor Module (MSM) using a coupling (6.2744.040).

Accessories

For this step, you need the following accessories:

- Coupling (6.2744.040)
- 2 × pressure screw (6.2744.010)

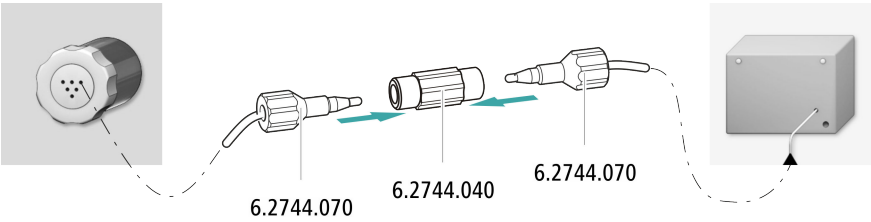

4.15 Installing the amperometric detector

The 930 Compact IC Flex provides enough space for one detector and additional accessories in the detector chamber. The detector is available as separate device and is supplied with a separate manual.

Placing the detector in the instrument

Follow the instructions in the chapter *Inserting the detector* in the manual for the detector.

4.16 Connecting the sample degasser (optional)

Gas bubbles in the sample lead to poor reproducibility, as the amount of sample in the sample loop is not always the same. Therefore, we recommend degassing samples that contain gas before injection.

NOTE

The sample degasser does not have to be connected. We recommend only using the sample degasser if the application requires it.

The rinsing time increases by at least two minutes when the sample degasser is connected.

Accessories

For this step, you need the following accessories:

- 2 × pressure screw, long (6.2744.090)
- PTFE capillary (6.1803.040)

Connecting the sample degasser

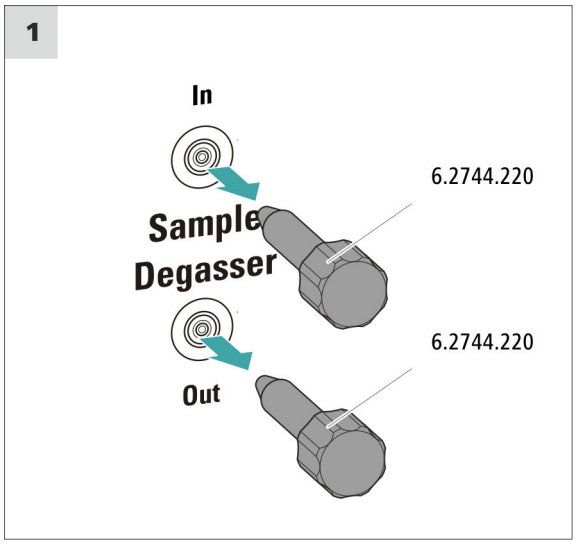

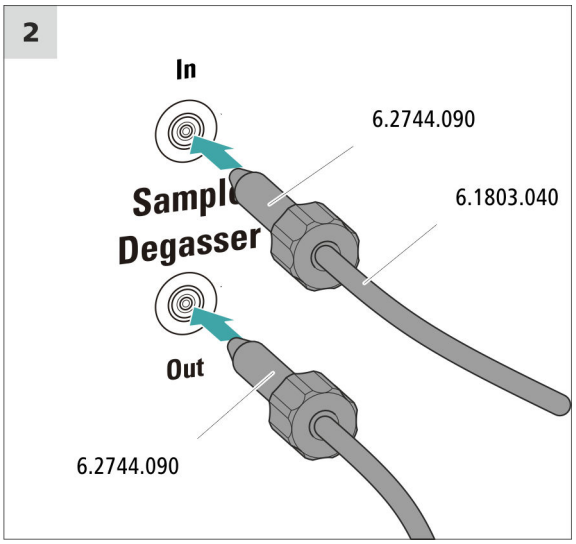

CAUTION

If the sample degasser is not used, the inlet and outlet **must** be sealed with threaded stoppers (6.2744.220).

4.17 Connecting the instrument to a computer

NOTE

If the instrument is connected to the computer, then it must be switched off.

Accessories

For this step, you need the following accessories:

- USB connection cable (6.2151.020) from the accessory kit: Vario/Flex Basic (6.5000.000)

Connecting the USB cable

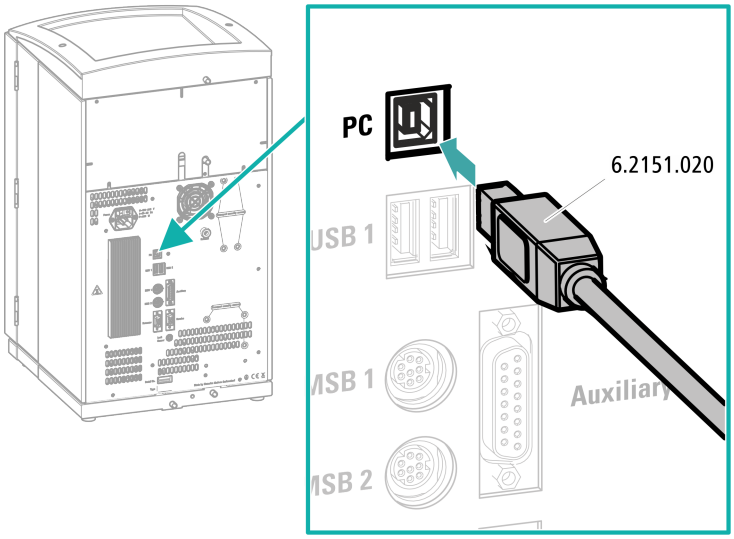

1. Insert the USB cable into the computer connection socket on the rear of the instrument.

2. Insert the other end into a USB port on the computer.

4.18 Connecting the instrument to the power grid

WARNING

Electric shock from electrical potential

Risk of injury by touching live components or through moisture on live parts.

- Never open the housing of the instrument while the power cord is still connected.
- Protect live parts (e.g. power supply unit, power cord, connection sockets) against moisture.
- Unplug the power plug immediately if you suspect that moisture has gotten inside the instrument.
- Only personnel who have been issued Metrohm qualifications may perform service and repair work on electrical and electronic parts.

Connecting the power cord

Accessories

Power cord with the following specifications:

- Length: max. 2 m
- Number of cores: 3, with protective conductor
- Instrument plug: IEC 60320 type C13
- Conductor cross-section 3x min. 1.0 mm^2 / 18 AWG
- Power plug:
  - according to customer requirement (6.2122.XX0)
  - min. 10 A

NOTE

Do not use a not permitted power cord!

1 Plugging in the power cord

- Plug the power cord into the instrument's power socket.
- Connect the power cord to the power grid.

4.19 Initial start-up

Even before the guard column and separation column are installed, the entire system must be completely rinsed with eluent for the first time.

Rinsing the IC system

CAUTION

The separation column and the guard column are not permitted to be installed at the time of the initial start-up.

Make sure that a coupling (6.2744.040) is being used instead of the columns.

1 Preparing the software

- Start the **MagIC Net** computer program.
- Open the **Equilibration** tab in MagIC Net: **Workplace ► Run ► Equilibration**.
- Import (or create) a suitable method.
  Also see: *MagIC Net Tutorial* and online help.

2 Preparing the instrument

- Ensure that the eluent aspiration tubing is immersed in the eluent and that there is enough eluent in the eluent bottle.
- – STREAM method (recommended): Ensure that the aspiration tubing for the regeneration solution is immersed in the solution and that there is enough solution. Check whether the detector outlet capillary is connected to the Metrohm Suppressor Module (MSM)'s inlet capillary for rinsing solution (labeled *rinsing solution*).
  – Alternatively, if two bottles are being used for rinsing and regeneration: Ensure that the aspiration tubings for the auxiliary solutions (regeneration solution and rinsing solution) are immersed in the respective solutions and that there is enough solution in both bottles. Check whether the detector outlet capillary is guided into the waste container or is connected with the waste collector.
- Switch on the instrument.

MagIC Net detects the instrument and all of its modules.

3 Starting equilibration

- Start the equilibration in MagIC Net: **Workplace ▶ Run ▶ Equilibration ▶ Start HW**.

4 Deaerating the high-pressure pump

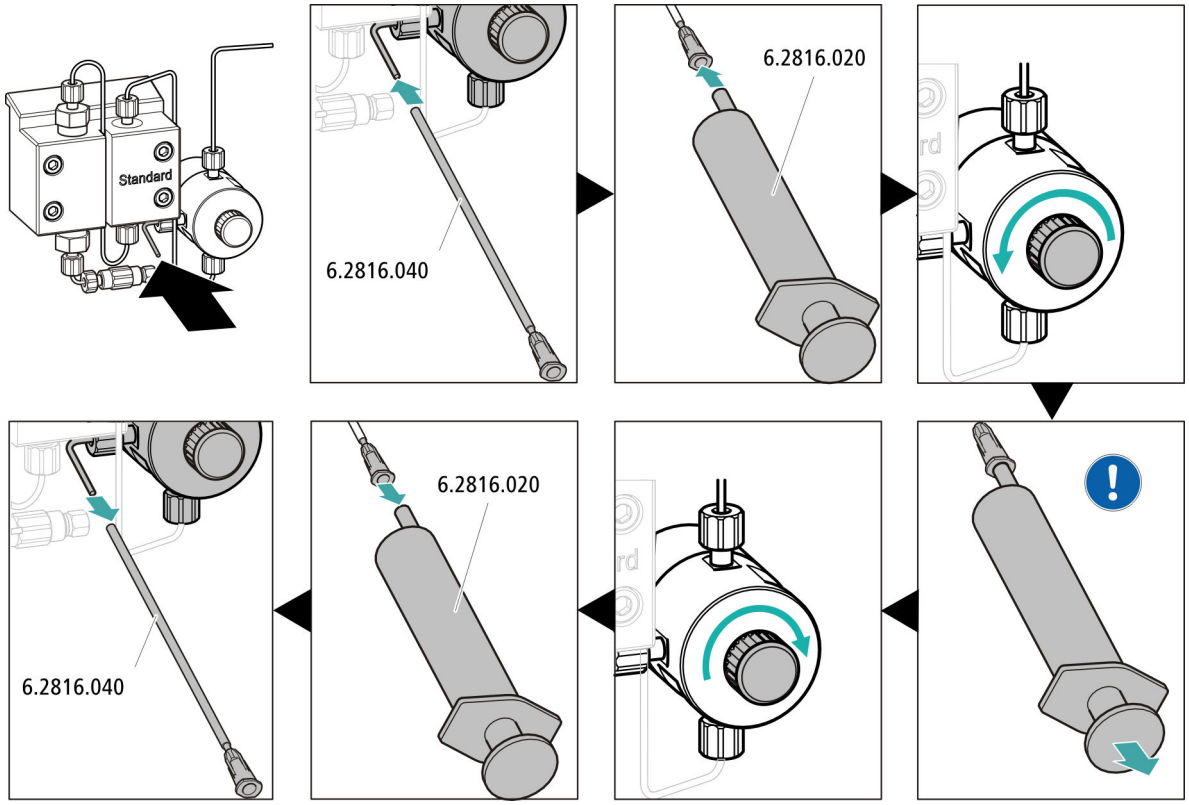

Use the syringe to aspirate eluent until there are no more air bubbles in the eluent aspiration tubing.

5 Adjusting the contact pressure of the peristaltic pump

- Adjust the contact pressure of the peristaltic pump *(see "Setting the contact pressure correctly", page 26)*.

6 Rinsing the instrument without columns

- Rinse the instrument (without columns) with eluent for 10 minutes.

4.20 Connecting and rinsing the guard column

CAUTION

New guard columns are filled with a solution and sealed with stoppers or caps on both sides.

Before inserting the guard column, ensure that this solution can be mixed with the eluent being used (follow the information provided by the manufacturer).

NOTE

The guard column may not be connected until after the instrument has already been put into operation once *(see chapter 4.19, page 31)*. The guard column and the separation column have to be replaced by a coupling (6.2744.040) until then.

Accessories

For this step, you need the following accessories:

- Guard column (suitable for separation column)

Connecting the guard column

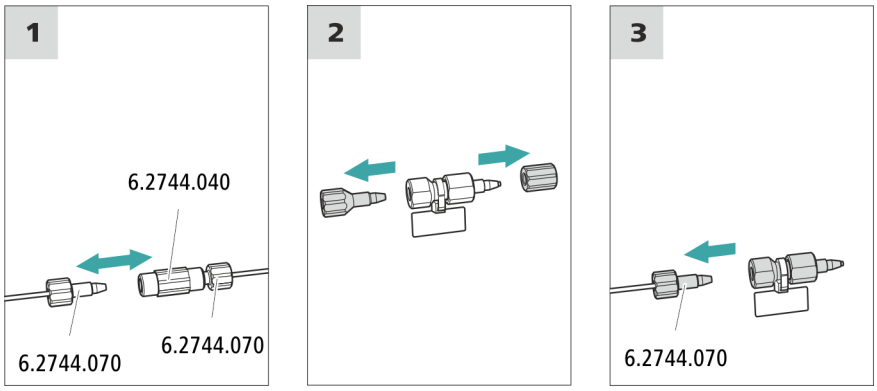

Rinsing the guard column

1 Rinsing the guard column

- Place a beaker under the guard column's outlet.

- Start manual control in MagIC Net and select the high-pressure pump: **Manual ► Manual control ► Pump**
  - **Flow**: **in accordance with column leaflet**
  - **On**
- Rinse the guard column with eluent for approx. 5 minutes.
- Stop the high-pressure pump in the manual control in MagIC Net again: **Off**.

4.21 Connecting the separation column

CAUTION

New separation columns are filled with a solution and sealed with stoppers on both sides. Before inserting the column, ensure that this solution can be mixed with the eluent being used (follow the information provided by the manufacturer).

NOTE

Connect the separation column only after the initial start-up of the instrument. Until that point, insert a coupling (6.2744.040) instead of the guard column and separation column.

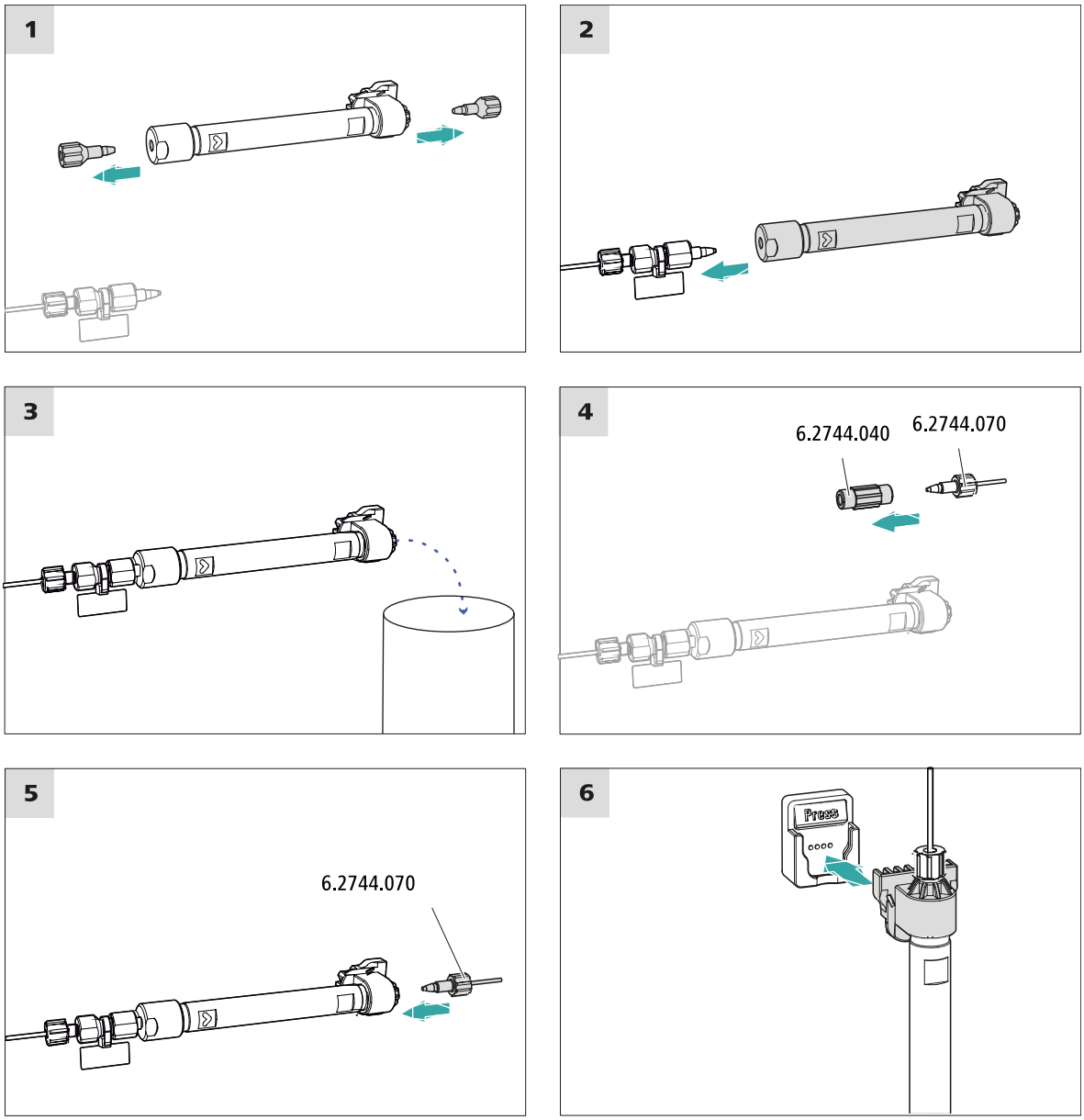

Connecting the separation column

1 Rinsing the separation column

- Place a beaker under the outlet of the separation column.
- Start manual control in MagIC Net and select the high-pressure pump: **Manual ► Manual control ► Pump**
  - **Flow**: Increase gradually up to the flow rate recommended in the column leaflet.
  - **On**
- Rinse the separation column with eluent for approx. 10 minutes.

- Stop the high-pressure pump in the manual control in MagIC Net again: **Off**.

4.22 Conditioning

In the following cases, the system must be conditioned with eluent until a stable baseline has been reached:

- After installation
- After each time the instrument is switched on
- After each eluent change

NOTE

The conditioning time can lengthen considerably if the composition of the eluent is modified.

Conditioning the system

1 Preparing the software

CAUTION

Ensure that the configured flow rate is not higher than the flow rate permitted for the corresponding column (refer to the column leaflet and chip data record).

- Start the **MagIC Net** computer program.
- Open the **Equilibration** tab in MagIC Net: **Workplace ► Run ► Equilibration**.
- Select (or create) a suitable method.
  Also see: *MagIC Net Tutorial* and online help.

2 Preparing the instrument

- Ensure that the column is inserted correctly in accordance with the flow direction marked on the sticker (arrow has to point in the direction of flow).
- Ensure that the eluent aspiration tubing is immersed in the eluent and that there is enough eluent in the eluent bottle.

3 Starting equilibration

- Start the equilibration in MagIC Net: **Workplace ► Run ► Equilibration ► Start HW**.

- Visually inspect whether all capillaries and their connections from the high-pressure pump to the detector are leak-tight. If eluent is leaking out anywhere, tighten the corresponding pressure screw further, or loosen the pressure screw, check the end of the capillary and shorten it using the capillary cutter if necessary and retighten the pressure screw.

4 Conditioning the system

Continue rinsing the system with eluent until the desired stability level for the baseline has been attained .

The instrument is now ready for measuring samples.

5 Operation

The 930 Compact IC Flex Oven/ChS/PP/Deg is operated solely using the MagIC Net software. You can find information on operating the software in the tutorial for MagIC Net or in the online help.

6 Accessories

Up-to-date information on the scope of delivery and on optional accessories for your instrument can be found on the Internet. You can download this information using the article number as follows:

Downloading the accessories list

1. Type *https://www.metrohm.com/* into your Internet browser.
2. Under **Find products, accessories, and applications by**, enter the article number (e.g. **2.930.2360**).

   The search result is displayed.
3. Under **Products**, click on **More information**.

   Detailed information regarding the product is shown on various tabs.
4. On the **Included parts** tab, click on **Download the PDF**.

   The PDF file with the accessories data will be created.

NOTE

When you receive your new instrument, we recommend downloading the accessories list from the Internet, printing it out and keeping it together with the manual for reference purposes.

Index

A

Aspiration tubing for eluent 18

B

Baseline
- Condition 37

C

Capillaries
- Installation 12

Column
- see "Separation column" 34

Computer connection 29
Conditioning 37
Connect
- Connect to power grid 30
- To computer 29

Connections
- Installation 12

D

Degasser
- Sample degasser 28

Drainage tubing
- Installation 15

E

Electrostatic charge 5
Eluent
- Aspirate 18

Eluent bottle
- Installation 17

Equilibration 32, 36

F

Filter
- see "Inline filter" 20

G

Guard column
- Installation 33
- Rinse 33

H

High-pressure pump
- Protection 14

I

IC column
- see "Separation column" 34

Injection valve 3
- Installation 20

Inline filter 20
Installation
- Connections 12
- Drainage tubing 15
- Eluent bottle 17
- Guard column 33
- Injection valve 20
- Leak sensor 16
- Peristaltic pump 25
- Pulsation absorber 20
- Pump tubing 25
- Sample degasser 28
- Separation column 34
- Suppressor 20

L

Leak sensor
- Installation 16

Leak-tightness 32

P

Peristaltic pump
- Installation 25

Power connection 30
Pulsation absorber
- Installation 20

Pump tubing
- Install 25

R

Rinse
- Guard column 33
- Separation column 35

S

Safety instructions 4
Sample degasser
- Installation 28

Separation column
- Installation 34
- Protection 3, 20
- Rinse 35

Service 5
Supply voltage 5
Suppressor
- Install rotor 20
- Installation 20

Suppressor drive
- see "Suppressor" 20

T

Transport locking screws 13
Tubings
- Installation 12

V

Vacuum pump
- Protection 14

Valve
- See also "Injection valve" 20